SicurEX
Fire Protection

THE GREEN FIRE SUPPRESSION TECHNOLOGY
AT WORK FOR YOU

SicurEX™
FIRE FIGHTING TECHNOLOGY

Dec.2020

Sicurex provides fire-fighting components for your complete fire-fighting solutions or systems as often very suitable for numerous industrial applications, land or off-shore application.

Monitors,
Foam branchpipes
Steam branchpipes
Adjustable water
Foam nozzles
Foam chambers / pourers
Foam generators
Foam pre-mixer
Proportioners
Foam Nozzles
In-line foam injectors / mixer
Twin agent unit
Foam unit
Hose reel
Trailers
Hydrants
Water curtain
Deluge valve
Butterfly valves
Water nozzles

This product complies with the technical specifications indicated in the standards:
EN 14816:2009 Fixed firefighting systems. Water spray systems. Design and installation
EN 13565-2:2009 Fixed firefighting systems. Foam systems. Design, construction and maintenance
NFPA 11:2010 Standard for Low, Medium, and High - Expansion Foam
NFPA 15:2007 Standard for Water Spray Fixed Systems for Fire Protection
NFPA 16:2011 Standard for the Installation of Foam -Water Sprinkler and Foam -Water Spray Systems

MANUAL MONITOR SERIES SX-015 - A

Suitable for every kind of supply terminal, foam or water

TECHNICAL DATA	
Inlet flange :	ANSI 150 RF or UNI - DN
Inlet measures :	2''-1/2, 3'' and 4''
Output :	Sicurex standard flange Ø160mm. Other types of flanges or connections on request.
Rotation :	Range adjustable from 0° to 360°. Rotating joints on balls track with greaser. Handles for movement lock.
Elevation	Adjustable from +80° -60° with lever lift
MATERIALS	
Body and flange	Carbon steel (A1), s.s. AISI 304 (B2), s.s. AISI 316 (B3)
FINISH	
Painting	Colour red RAL 3000
OPTIONAL	
Pressure gauge on output Monitor drain valve	

DIMENSIONS

REFERENCE	Lt. / Min	A mm	B mm	C mm	D mm	E mm	WEIGHT Kg
MO 015 A200 A1	100 - 2000	660	305	395	DN65 2"1/2	295	20,0
MO 015 A200 B2/B3	100 - 2000	660	390	485	DN65 2"1/2	355	21,0
MO 015 A300 A1	100 - 3000	660	320	460	DN80 3"	365	30,0
MO 015 A300 B2/B3	100 - 3000	660	425	565	DN80 3"	445	32,0
MO 015 A600 A1	3100 - 6000	660	365	580	DN100 4"	460	45,0
MO 015 A600 B2/B3	3100 - 6000	660	510	720	DN100 4"	560	47,0

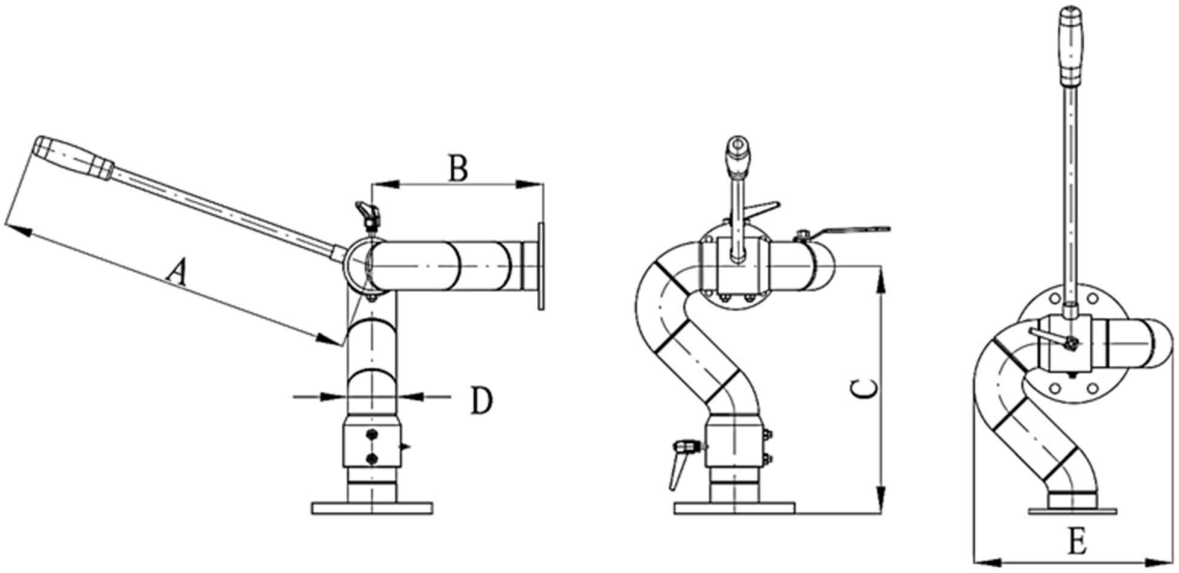
A
B
D
C
E

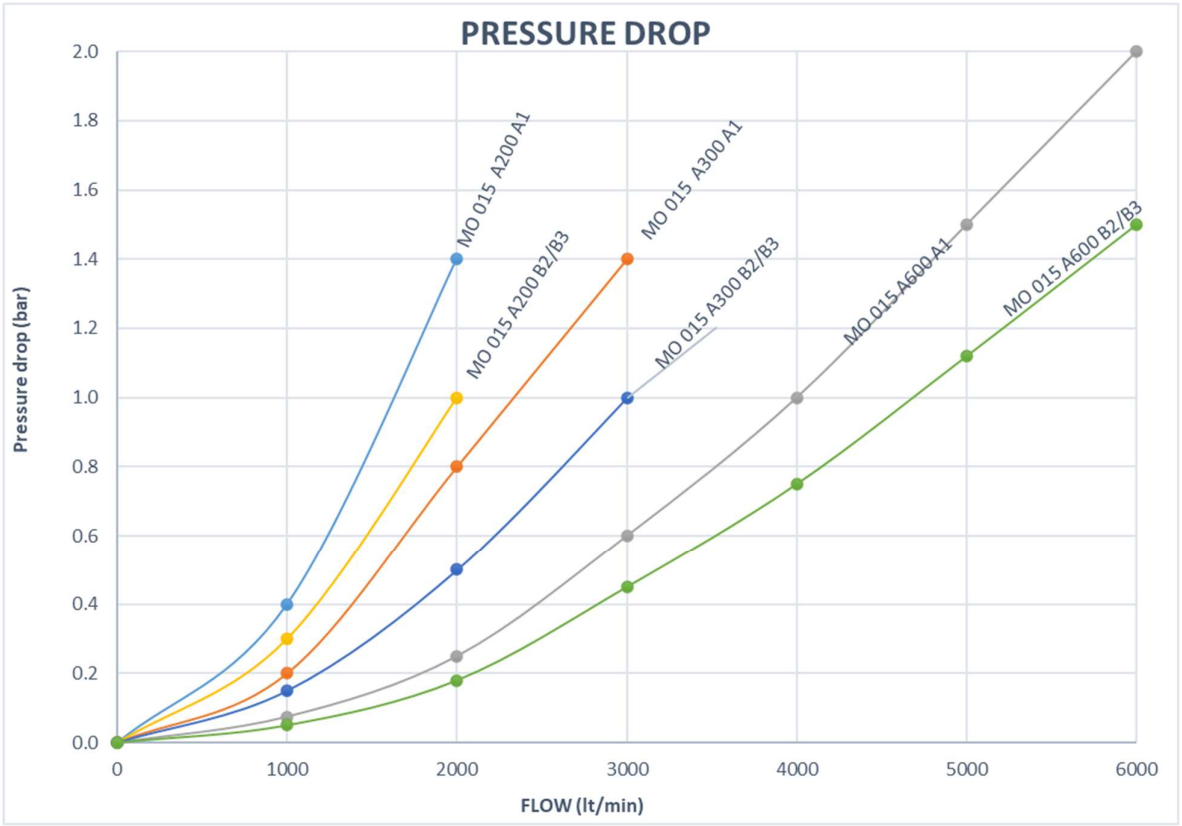
PRESSURE DROP
Pressure drop (bar)
FLOW (lt/min)
0.0
0.2
0.4
0.6
0.8
1.0
1.2
1.4
1.6
1.8
2.0
0
1000
2000
3000
4000
5000
6000
MO 015 A200 A1
MO 015 A200 B2/B3
MO 015 A300 A1
MO 015 A300 B2/B3
MO 015 A600 A1
MO 015 A600 B2/B3

SINGLE AND DOUBLE HANDWHEEL OPERATED MONITOR SERIES SX-024 - B

Suitable for every kind of supply terminal, foam or water

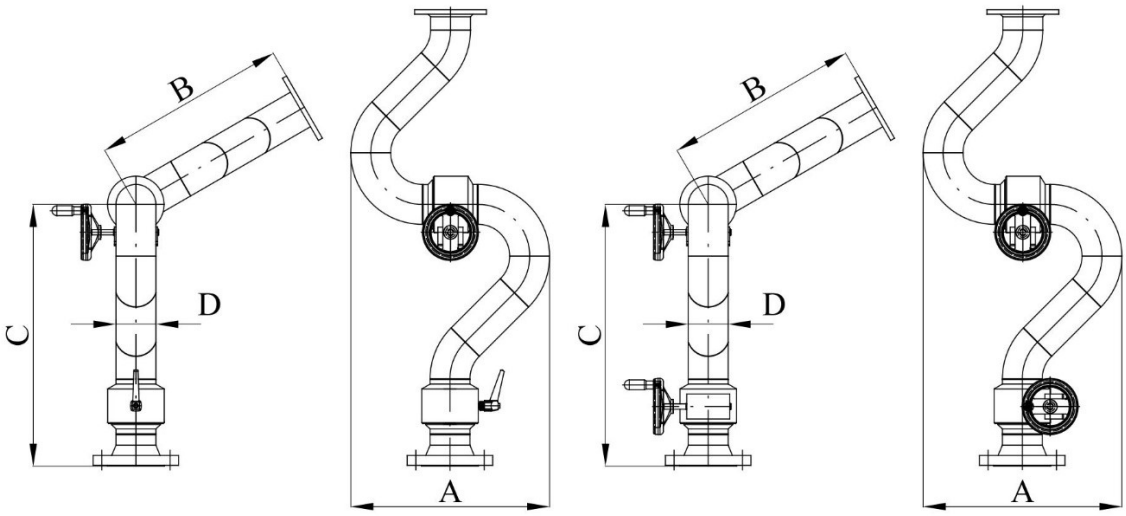

TECHNICAL DATA	
Inlet flange :	ANSI 150 RF or UNI - DN
Inlet measures :	3'' or 4''
Output :	Sicurex standard flange. Other types of flanges or connections on request.
Rotation :	Range adjustable from 0° to 360°. Rotating joints on double balls track with greaser Handles for movement lock (in the single handwheel version)
Elevation	Adjustable from +80° -60° with lever lift Lift / rotation control through handwheels
MATERIALS	
Body :	Carbon steel (A1), s.s. AISI 304 (B2), s.s. AISI 316 (B3)
Flange :	carbon steel (A1), s.s. AISI 304 (B2), s.s. AISI 316 (B3)
Rotation gears :	Bronze (T5), s.s. AISI 304 (B2), s.s. AISI 316 (B3)
FINISH	
Painting	Colour red RAL 3000
OPTIONAL	
Pressure gauge on output	

DIMENSIONS

REFERENCE	Lt. / Min	A mm	B mm	C mm	D mm	WEIGHT Kg
MO 024 B300 A1 S	100 – 3000	375	320	460	3” DN80	30,0
MO 024 B300 A1 D	100 – 3000	375	320	470	3” DN80	30,0
MO 024 B300 B2/B3 S	100 – 3000	455	425	565	3” DN80	32,0
MO 024 B300 B2/B3 D	100 – 3000	455	425	575	3” DN80	32,0
MO 024 B600 A1 S	3100 – 6000	460	365	575	4” DN100	40,0
MO 024 B600 A1 D	3100 – 6000	460	365	575	4” DN100	40,0
MO 024 B600 B2/B3 S	3100 – 6000	560	510	720	4” DN100	43,0
MO 024 B600 B2/B3 D	3100 – 6000	560	510	720	4” DN100	43,0

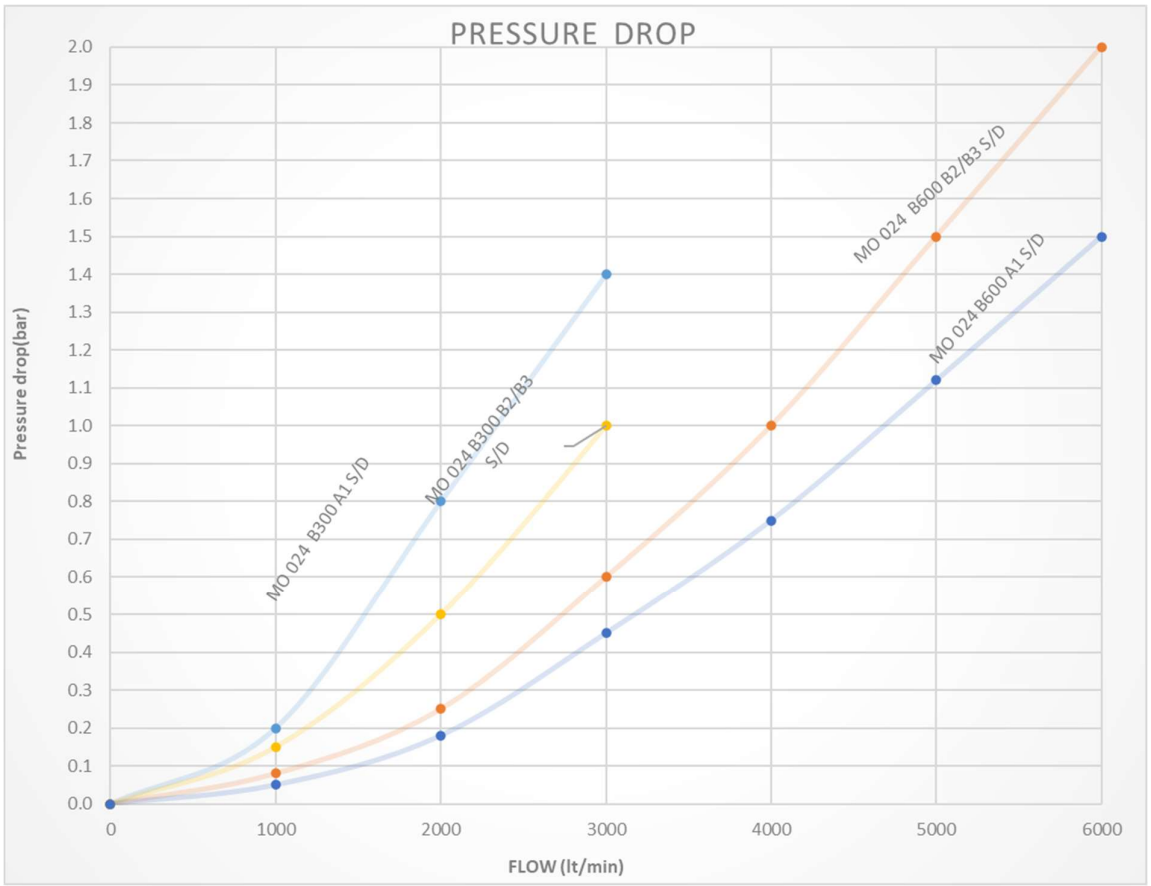

LOWERED MANUAL MONITOR SERIES SX-026 - F

Suitable for every kind of supply terminal, foam or water

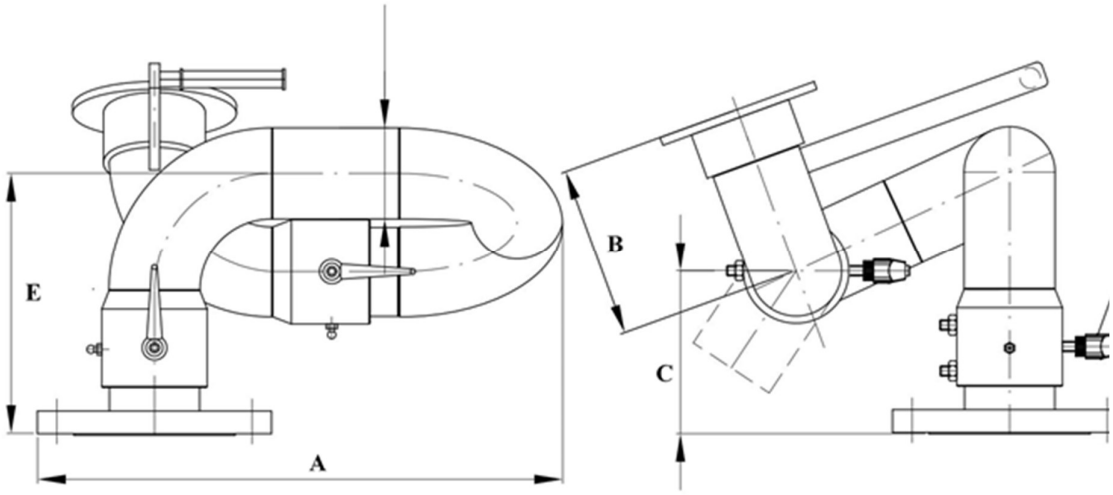

TECHNICAL DATA	
Inlet flange :	ANSI 150 RF or UNI - DN
Inlet measures :	3'' or 4''
Output :	Sicurex standard flange. Other types of flanges or connections on request.
Rotation :	Range adjustable from 0° to 360°. With lever lift handles for movement lock Rotating joints on double balls track with greaser
Elevation :	Adjustable from +70° -55° With lever lift handles for movement lock
MATERIALS	
Body :	Carbon steel (A1), s.s. AISI 304 (B2), s.s. AISI 316 (B3)
Flange :	Carbon steel (A1), s.s. AISI 304 (B2), s.s. AISI 316 (B3)
FINISH	
Painting :	Colour red RAL 3000
OPTIONAL	
Pressure gauge on output	

DIMENSIONS

REFERENCE	Lt. / Min	A mm	B mm	C mm	D mm	E mm	WEIGHT Kg
MO 026 F300 A1/B2/B3	100 - 3000	515	160	160	3" DN80	260	30,0
MO 026 F600 A1/B2/B3	3100 - 6000	565	220	240	4" DN100	370	47,0

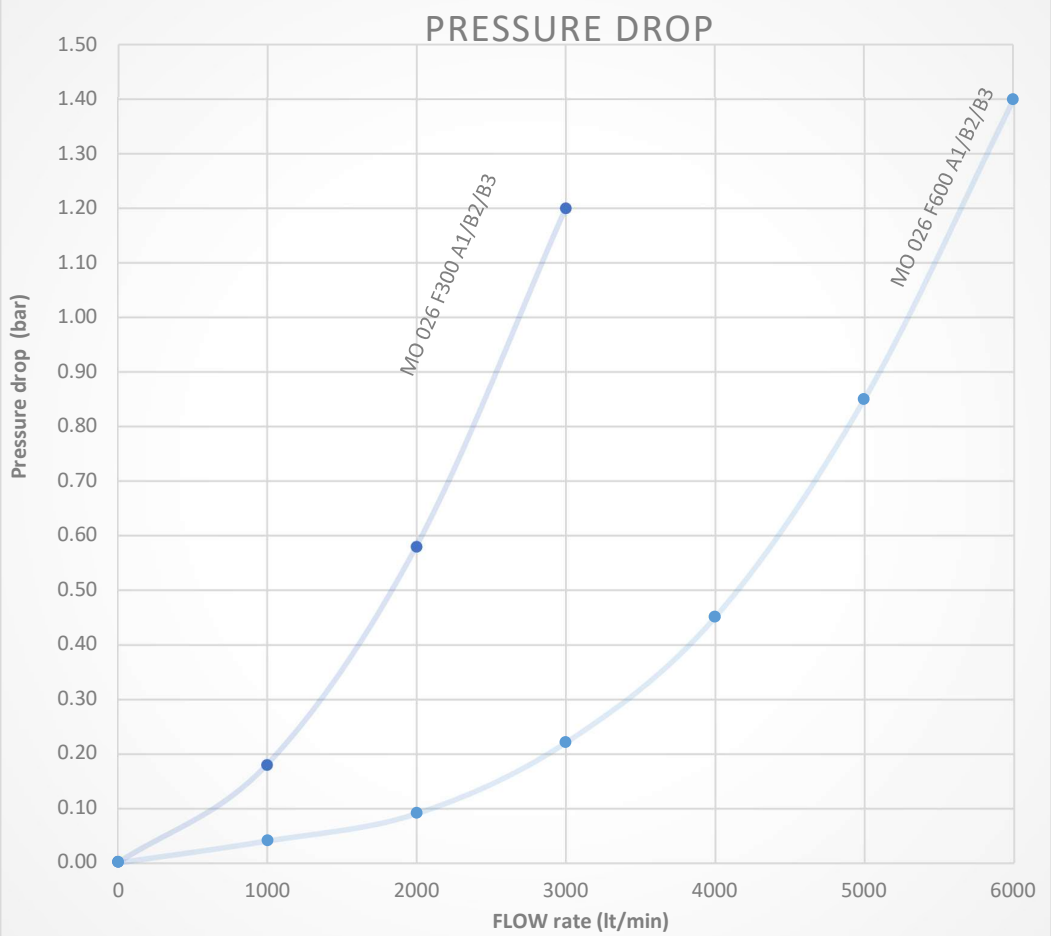

LOWERED MONITORS WITH DOUBLE HANDWHEEL SERIES SX-028 - G

Suitable for every kind of supply terminal, foam or water

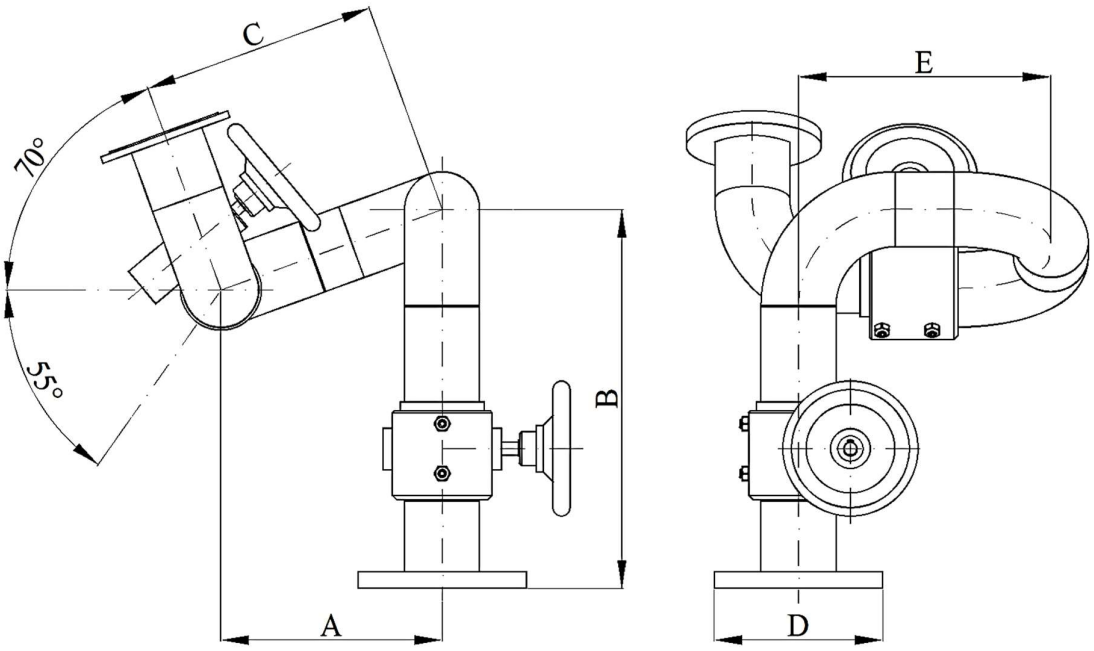

TECHNICAL DATA	
Inlet flange :	ANSI 150 RF or UNI - DN
Inlet measures :	3''
Output :	Sicurex standard flange. Other types of flanges or connections on request.
Rotation :	Range adjustable from 0° to 360° with handwheels Rotating joints on double balls track with greaser
Elevation :	Adjustable from +70° -55° with handwheels
MATERIALS	
Body :	Carbon steel (A1), s.s. AISI 304 (B2), s.s. AISI 316 (B3)
Flange :	Carbon steel (A1), s.s. AISI 304 (B2), s.s. AISI 316 (B3)
Rotation gear :	Carbon steel (A1), s.s. AISI 304 (B2), s.s. AISI 316 (B3)
FINISH	
Painting :	Colour red RAL 3000
OPTIONAL	
Stainless steel version, brushed surface finish	

DIMENSIONS

REFERENCE	Lt. / Min	A mm	B mm	C mm	D mm	E mm	WEIGHT Kg
MO 028 G300 A1	100 - 3000	260	450	280	3" DN80	353	27,0
MO 028 G600 A1	3100 - 6000	295	515	320	4" DN100	400	36,0

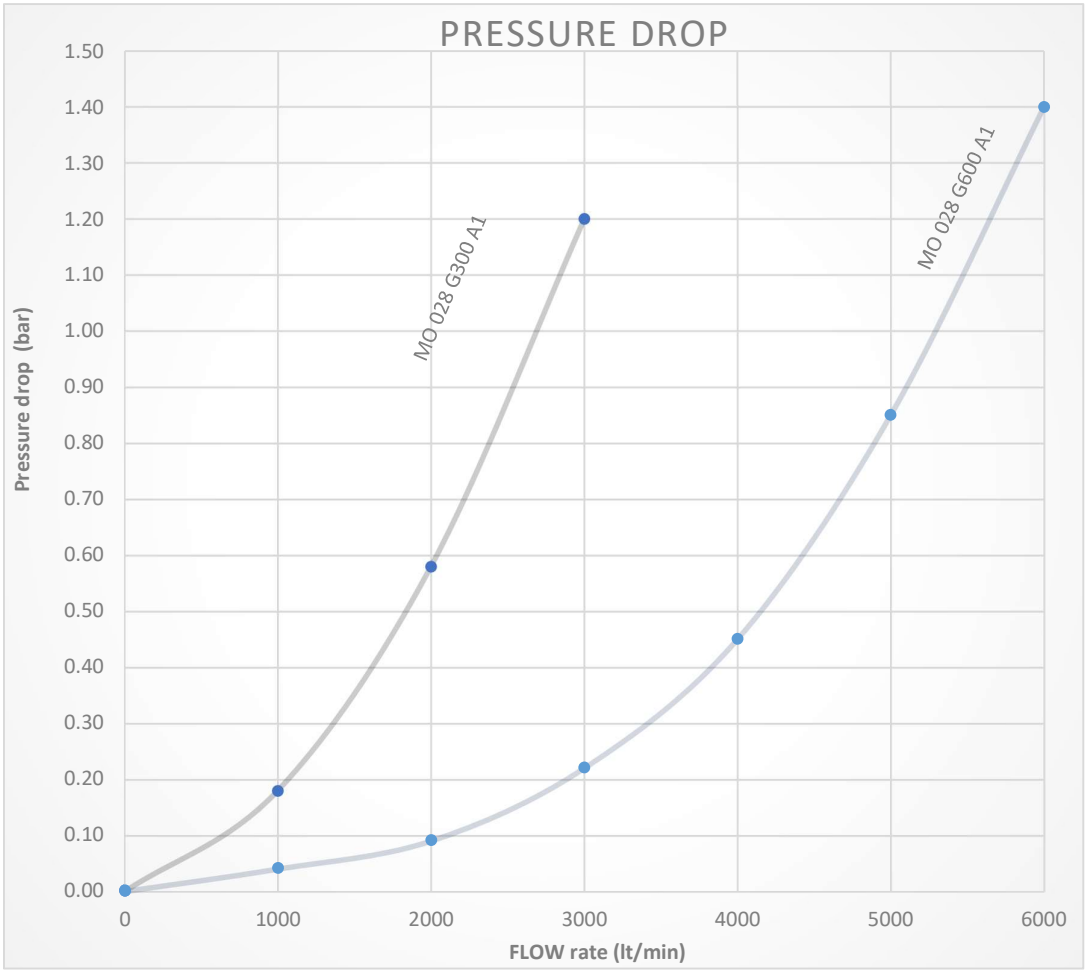

SELF-SWINGING MONITORS SERIES SX-030 - D

Suitable for every kind of supply terminal, foam or water

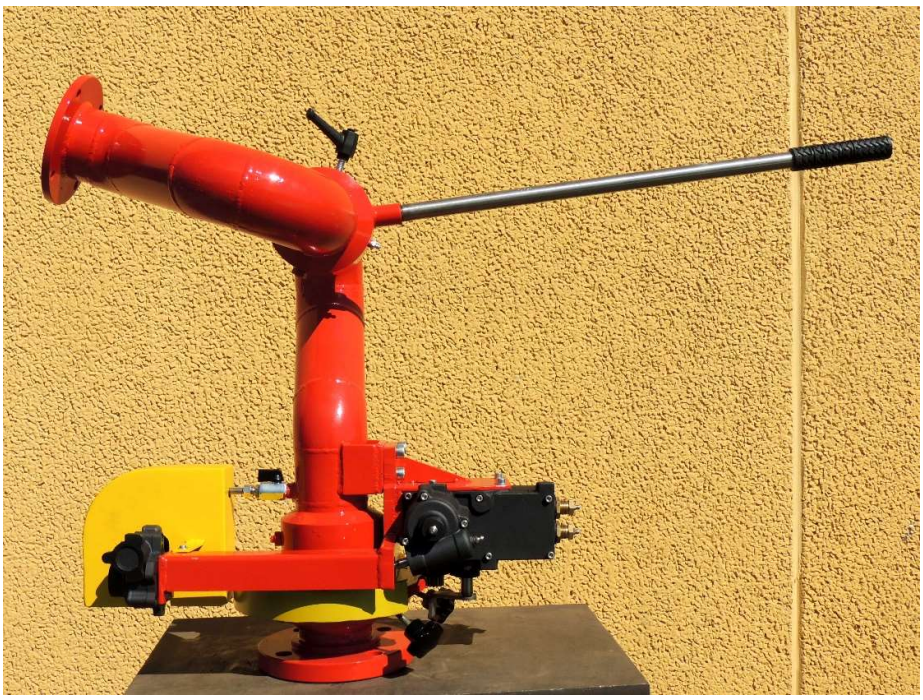

TECHNICAL DATA	
Inlet flange :	ANSI 150 RF or UNI - DN
Inlet measures :	3'' or 4''
Output :	Sicurex standard flange. Other types of flanges or connections on request.
Rotation :	Range adjustable from 0° to 360° Rotating joints on double balls track with greaser
Elevation :	Adjustable from + 80° -60° with lever lift and handles for movement lock
MATERIALS	
Body :	Carbon steel (A1), s.s. AISI 304 (B2), s.s. AISI 316 (B3)
Flange :	Carbon steel (A1), s.s. AISI 304 (B2), s.s. AISI 316 (B3)
FINISH	
Painting :	Colour red RAL 3000
OPTIONAL	
Pressure gauge on output	

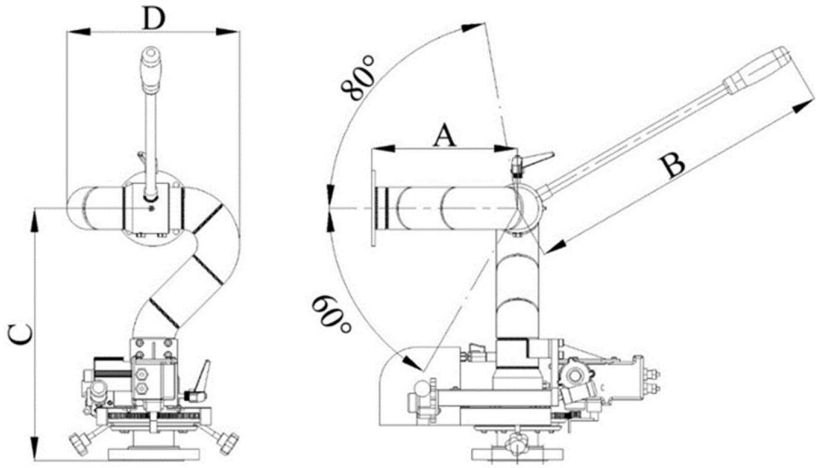

DIMENSIONS

REFERENCE	Flow rate Lt. / Min	D INLET mm	A mm	B mm	C mm	D mm	WEIGHT Kg
SX-30 D300 A1	100 - 3000	3" DN80	320	660	535	365	40
SX-30 D300 B2/B3	100 - 3000	3" DN80	425	660	645	445	42
SX-30 D600 A1	3100 - 6000	4" DN100	365	660	685	460	50
SX-30 D600 B2/B3	3100 - 6000	4" DN100	511	660	830	560	52

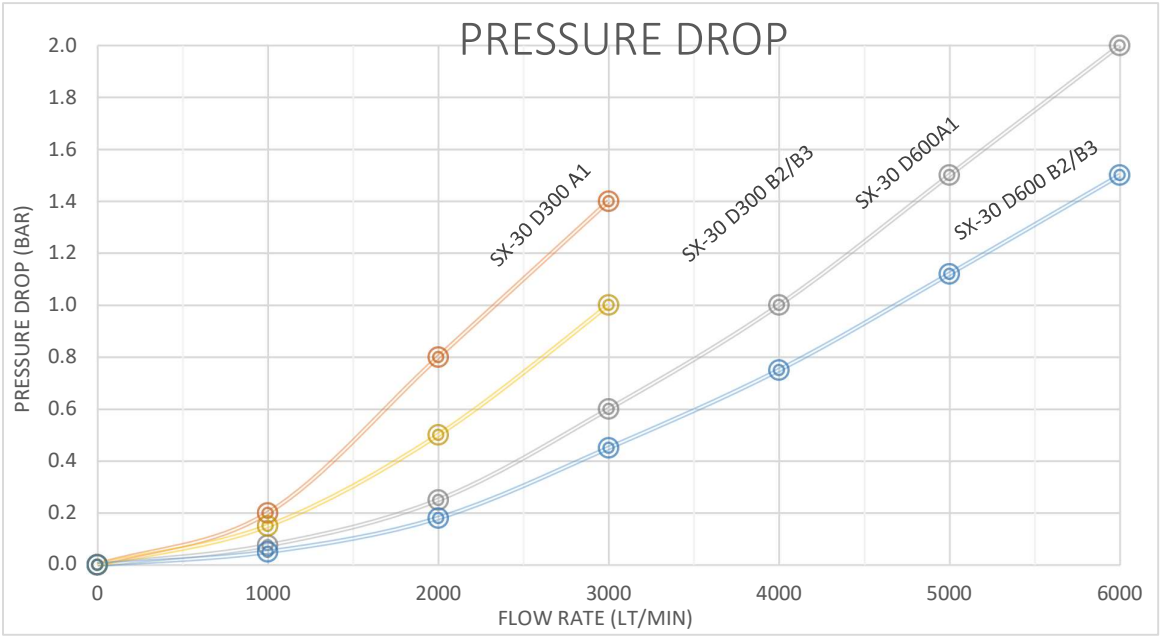

SELF-SWINGING DEVICE SERIES SX-032 – SOD 3

Allows transforming a manual monitor, with levers or handwheels, into a self-swinging model.

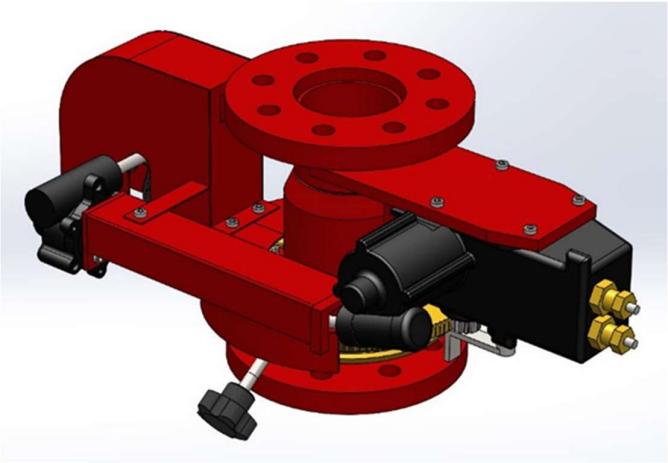

TECHNICAL DATA	
Inlet flange :	ANSI 150 RF or UNI - DN
Inlet measures :	3''
Inlet measures :	3" / DN80 or 4" / DN100
Output flange :	ANSI 150 RF or UNI – DIN
Output measures :	3" / DN80 or 4" / DN100
Rotation :	Range adjustable from 0° to 360° Rotating joints on double balls track with greaser
MATERIALS	
Body :	Carbon steel (A1), inox AISI 304 (B2), inox AISI 316 (B3)
Flange :	Carbon steel (A1), inox AISI 304 (B2), inox AISI 316 (B3)
FINISH	
Painting :	Colour red RAL 3000

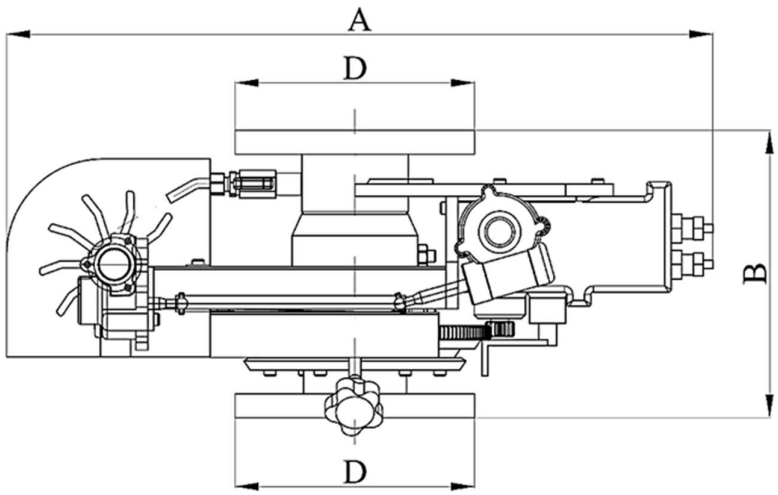

DIMENSIONS

REFERENCE	A mm	B mm	D mm	WEIGHT Kg
MO 032 – SOD 3	590	240	3'' DN80	660

ELECTRICAL OPERATED MONITORS SERIES SX-037 – H

The SX-037 – H series monitors allow movement on the horizontal and vertical planes and the adjustment of the launching device with electric actuators and motors.
Available in ATEX configuration
If necessary the monitor can be manual operated by a lever and a hand wheel.
The materials of construction makes the SX-037 – H suitable for being used with seawater or water-foam solutions within industrial environments and offshore applications.
Suitable for every kind of throwing device foam or water.

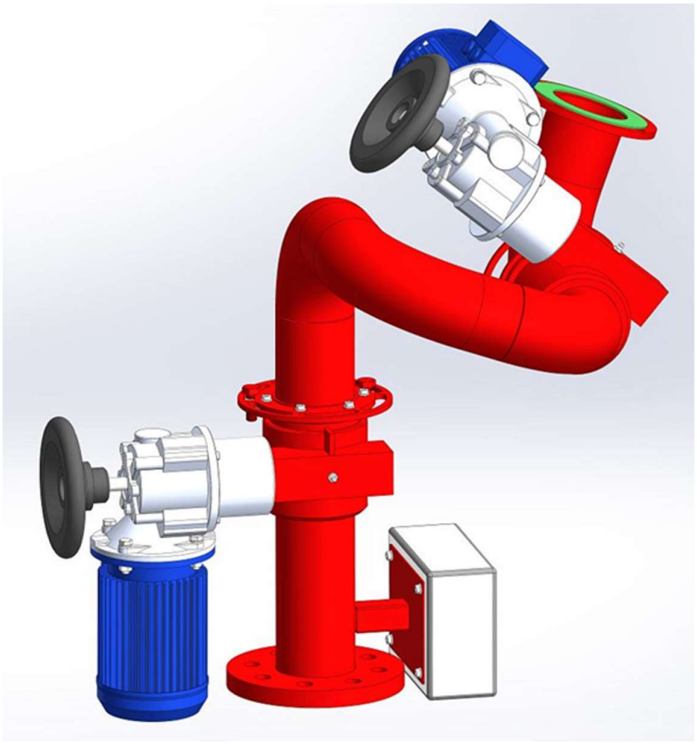

TECHNICAL DATA	
Inlet flange :	ANSI 150 RF or UNI - DN
Body size :	3'' or 4''
	Mechanical limit and anti-torque clutch
Output flange :	ANSI 150 RF or UNI – DIN
Output measures :	3" / DN80 or 4" / DN100
Rotation :	Continuous rotation field of 350° Rotating joints on double balls track
MATERIALS	
Body :	Carbon steel (A1), inox AISI 304 (B2), inox AISI 316 (B3)
Flange :	Carbon steel (A1), inox AISI 304 (B2), inox AISI 316 (B3)
FINISH	
Carbon steel version	Painting- Colour red RAL 3000
Stainless steel version	Brushed surface finish
OPTIONAL	Pressure gauge on output

REFERNCE	FLOW RATE L / min	A mm	B mm	C mm	D	WEIGHT KG
MO 037 H300 A1/ B2/B3	100 - 3000	775	775	500	3" DN80	65,0
MO 037 H300 Ex A1/B2/B3	100 - 3000	750	775	555	3" DN80	70,0
MO 037 H600 A1/ B2/B3	3100 - 6000	1070	1070	690	4" DN100	80,0
MO 037 H600 Ex A1/B2/B3	3100 - 6000	1015	1070	745	4" DN100	86,0

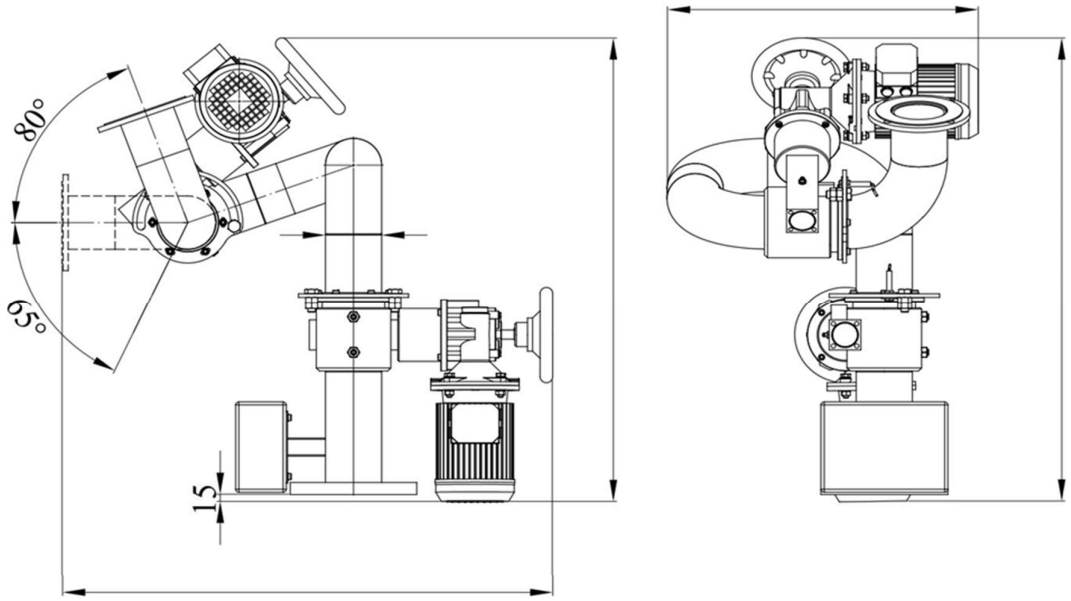

ATEX CONFIGURATION

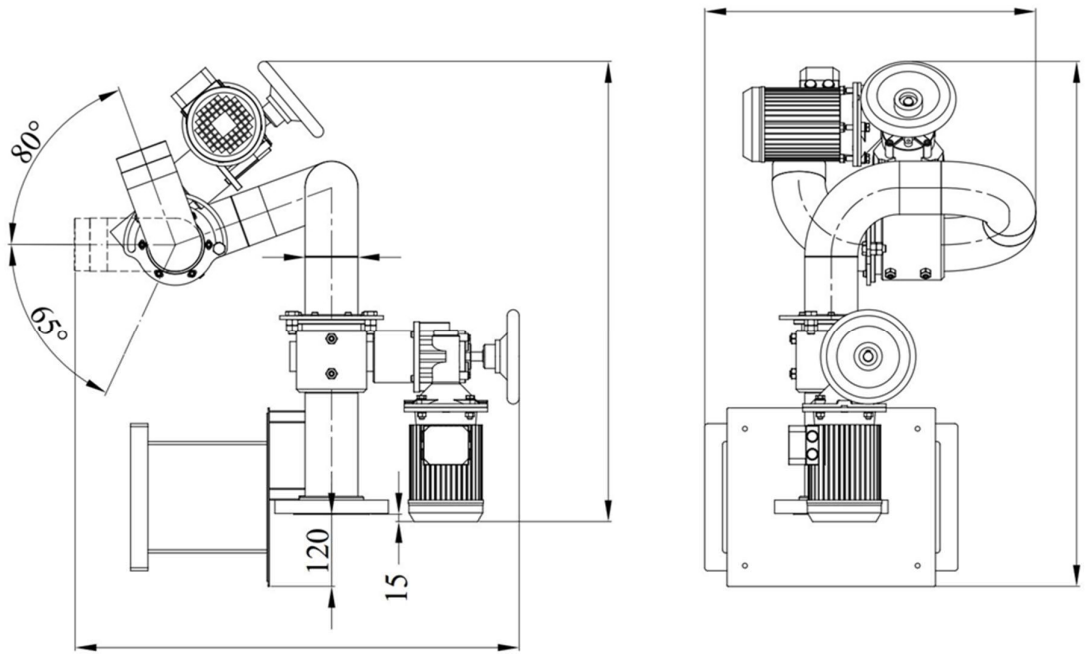

REFERENCE	Actuator	Electrical characteristics	IP protection
MO 037 H300	Gearboxes with manual control and electric motor	Nominal voltage : 220 - 400 Vac 50Hz Nominal power : 0,18 kW Nominal absorbed current : 1.70 A Current absorbent cue : 4,40 A	IP 67
MO 037 H600			
MO 037 H300 Ee-XD	Gearboxes with manual control and ATEX electric motor	Nominal voltage : 220 - 400 Vac 50Hz Nominal power : 0,18 kW Nominal absorbed current : 0.70 A Current absorbent cue : 2.60 A	IP 65
MO 037 H600 Ee-XD			

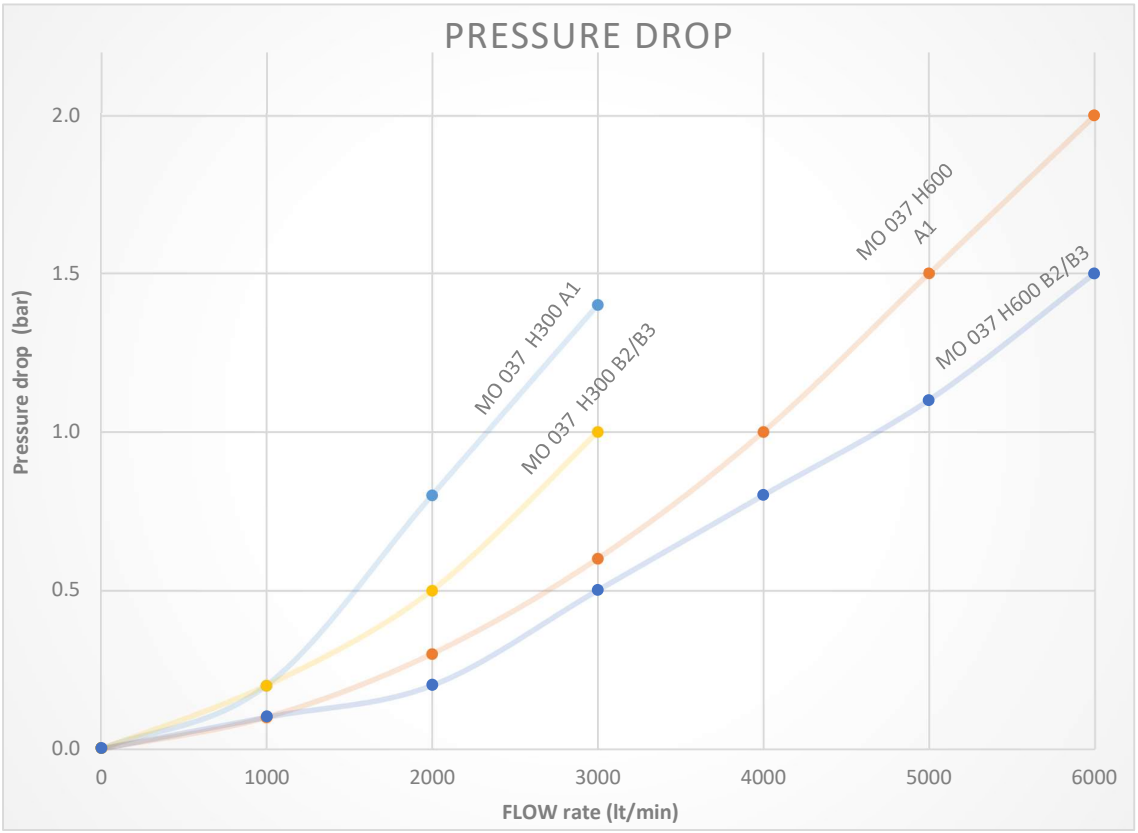

FOAM BRANCHIPIPES SERIES SX_040 - A

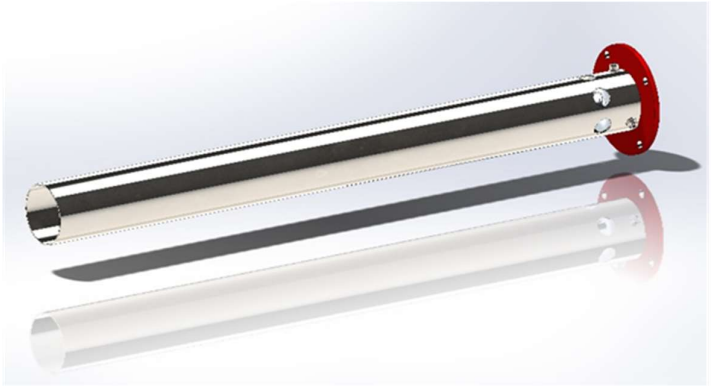

TECHNICAL DATA	
Inlet flange :	Standard Sicurex MØ160mm or threaded connections on request
MATERIALS	
Body	s.s. AISI 304 (B2), s.s. AISI 316 (B3)
Flange	Carbon steel (A1), s.s. AISI 304 (B2),s.s. AISI 316 (B3)
FINISH	
Painting	Colour red RAL 3000
Stainless steel parts	Brushed surface

DIMENSIONS

REFERENCE	FLOW RATE Lt. / Min	L mm	D1	D2	WEIGHT Kg
FB 040 A300	500 - 3000	1000	3'' DN80	Sicurex Ø160mm	8.0
FB 040 A600	3100 - 6000		4'' DN100		9.0

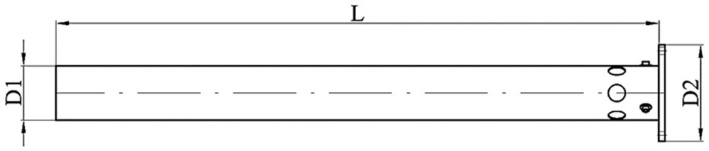

REFERENCE	FLOW RATE (lt/min)						
	PRESSURES (bar)						
	1 (K)	5	6	7	8	9	10
FB 040 A300	189	425	465	500	535	570	600
	378	845	925	1000	1070	1135	1195
	567	1270	1390	1500	1605	1700	1795
	756	1690	1850	2000	2140	2270	2390
	945	2115	2315	2500	2675	2835	2990
	1134	2535	2775	3000	3205	3400	3585

REFERENCE	FLOW RATE (lt/min)						
	PRESSURES (bar)						
	1 (K)	5	6	7	8	9	10
FB 040 A600	**1512**	3380	3705	**4000**	4275	4535	4780
	1890	4225	4630	**5000**	5345	5670	5975
	2270	5070	5555	**6000**	6415	6805	7170

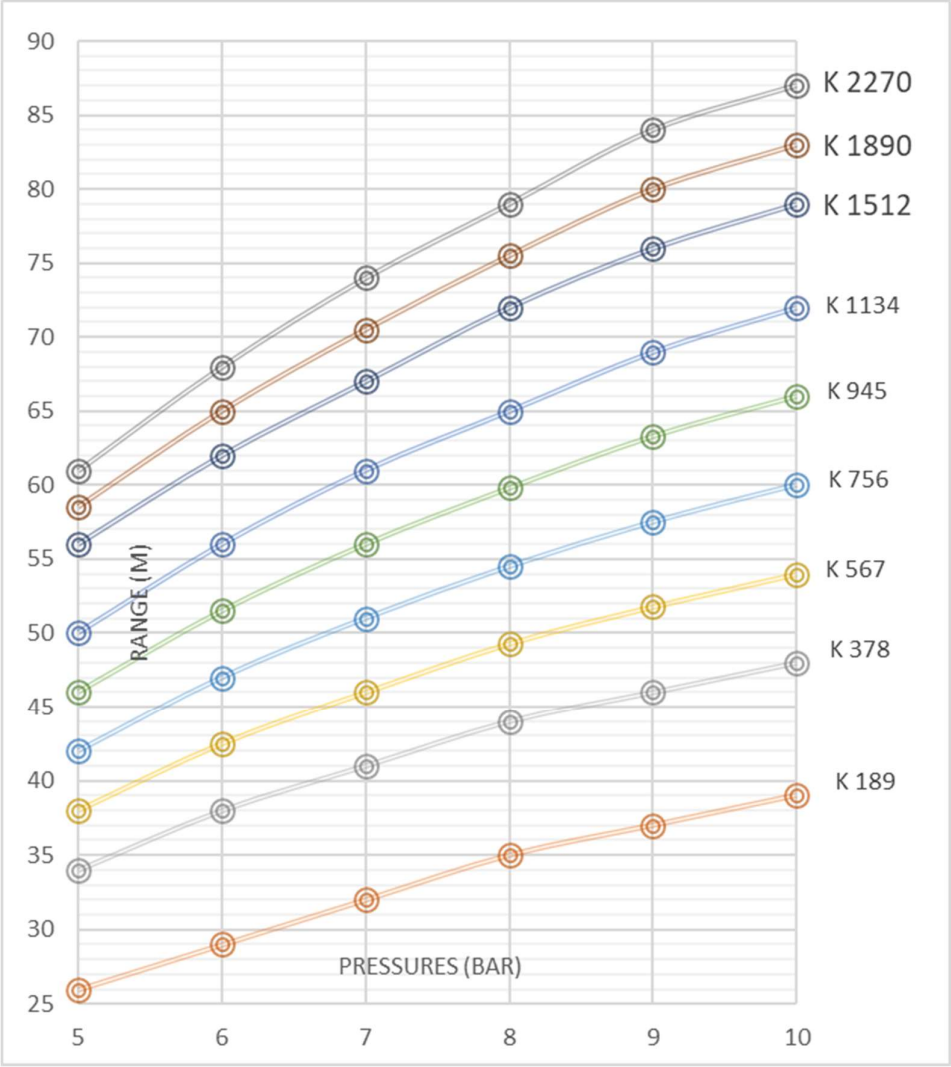

TAPERED FOAM BRANCHPIPES SERIES SX_042 - S

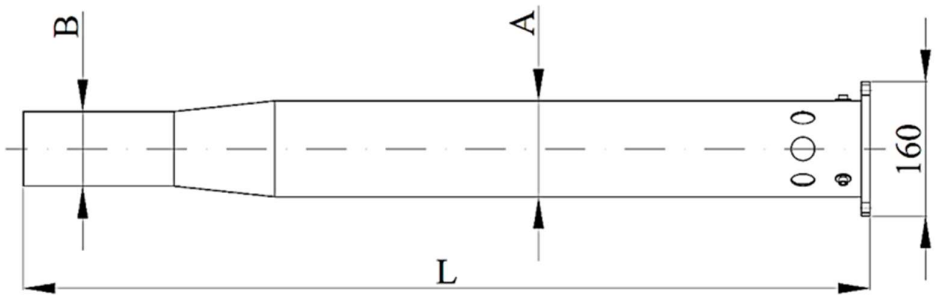

TECHNICAL DATA

Inlet flange :	Standard Sicurex Ø160mm or threaded connections on request
MATERIALS	
Body	s.s. AISI 304 (B2), s.s. AISI 316 (B3)
Flange	Carbon steel (A1), s.s. AISI 304 (B2),s.s. AISI 316 (B3)
FINISH	
Sicurex flange	Colour red RAL 3000
Stainless steel parts	Brushed surface

DIMENSIONS

REFERENCE	L mm	A	B	WEIGHT Kg
LM 42 S 4	1000	4''	3''	12.0

REFERENCE	FLOW RATE (lt/min)						
	PRESSURES (bar)						
	1 (K)	5	6	7	8	9	10
LM 42 S 4	1134	2535	2775	3000	3205	3400	3585
	1512	3380	3705	4000	4275	4535	4780
	1890	4225	4630	5000	5345	5670	5975
	2270	5070	5555	6000	6415	6805	7170

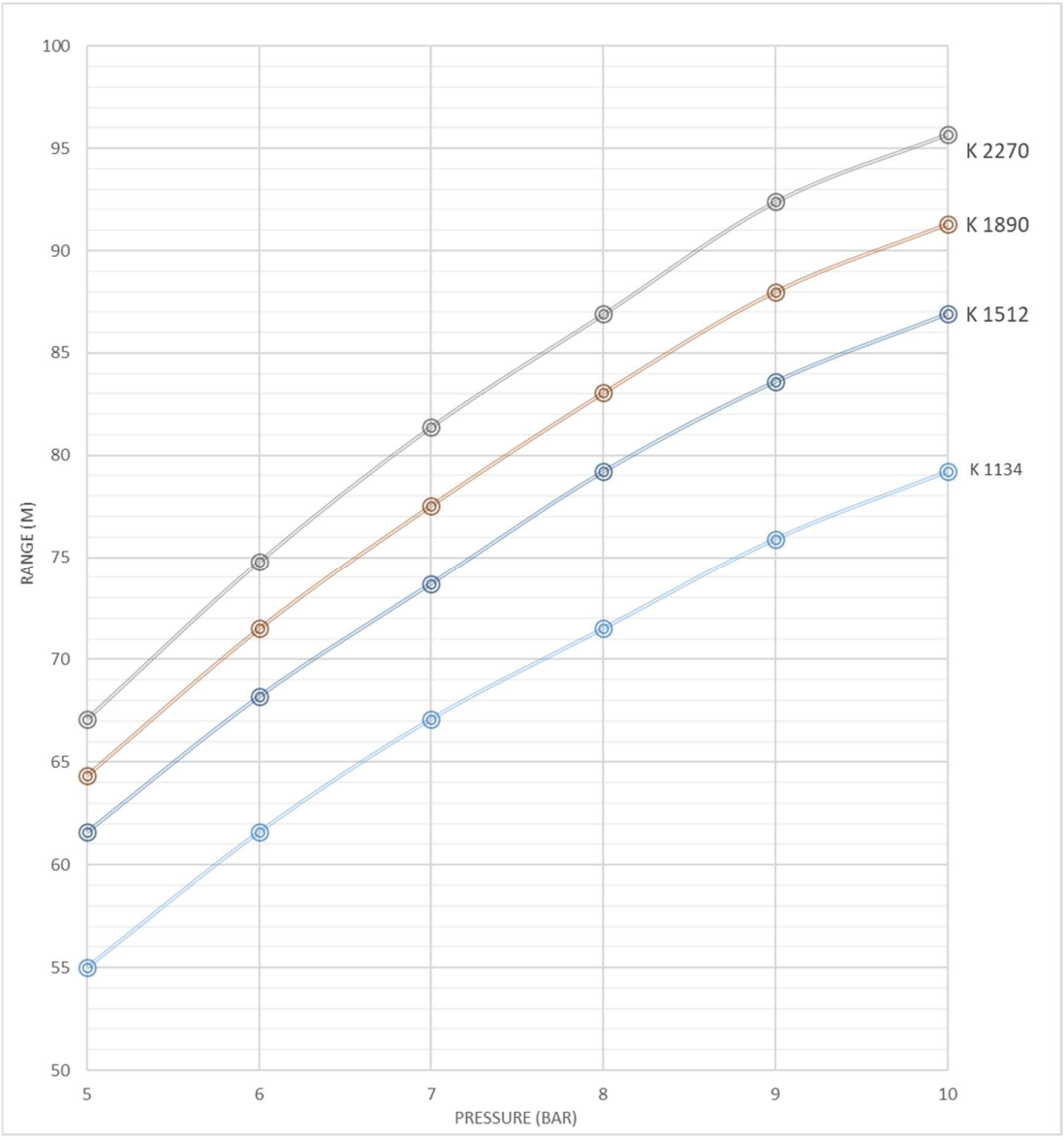
100
95
90
85
80
75
70
65
60
55
50
RANGE (M)
5
6
7
8
9
10
PRESSURE (BAR)
K 2270
K 1890
K 1512
K 1134

SELFSUCKING FOAM BRANCHPIPES SERIES SX - 045 – B

Foaming ratio : 6%

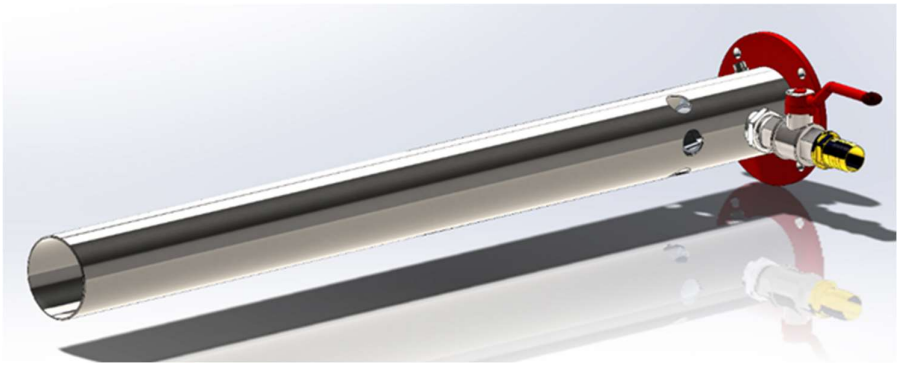

TECHNICAL DATA

Inlet flange :	Standard Sicurex Ø160mm or threaded connections on request
MATERIALS	
Body	s.s. AISI 304 (B2), s.s. AISI 316 (B3)
Flange	Carbon steel (A1), s.s. AISI 304 (B2),s.s. AISI 316 (B3)
Suction valve	Chromed brass
FINISH	
Sicurex flange	Colour red RAL 3000
Stainless steel parts	Brushed surface

DIMENSIONS

REFERENCE	FLOW RATE Lt / min	L mm	D1	D2	WEIGHT Kg
LM 042 B300 B2/B3	500 - 3000	1000	3'' DN80	Ø160mm	8.5
LM 042 B600 B2/B3	3100 - 6000	1000	4'' DN100	Ø160mm	9.5

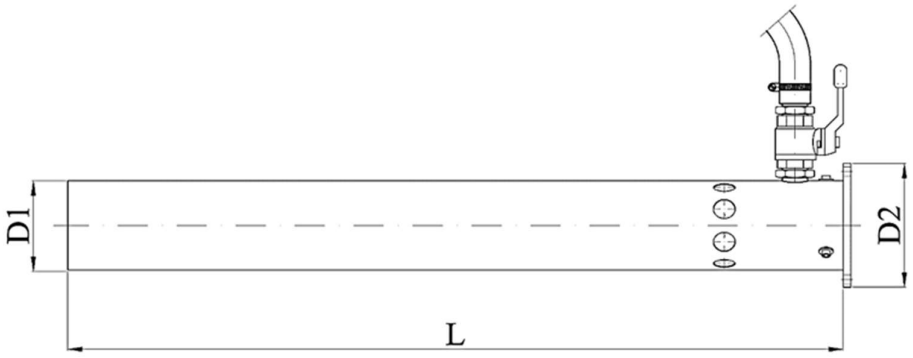

REFERENCE	FLOW RATE (lt/min)						
	PRESSURES (bar)						
	1 (K)	5	6	7	8	9	10
LM 042 B300	**189**	425	465	**500**	535	570	600
	378	845	925	**1000**	1070	1135	1195
	567	1270	1390	**1500**	1605	1700	1795
	756	1690	1850	**2000**	2140	2270	2390
	945	2115	2315	**2500**	2675	2835	2990
	1134	2535	2775	**3000**	3205	3400	3585
LM 042 B600	**1512**	3380	3705	**4000**	4275	4535	4780
	1890	4225	4630	**5000**	5345	5670	5975
	2270	5070	5555	**6000**	6415	6805	7170

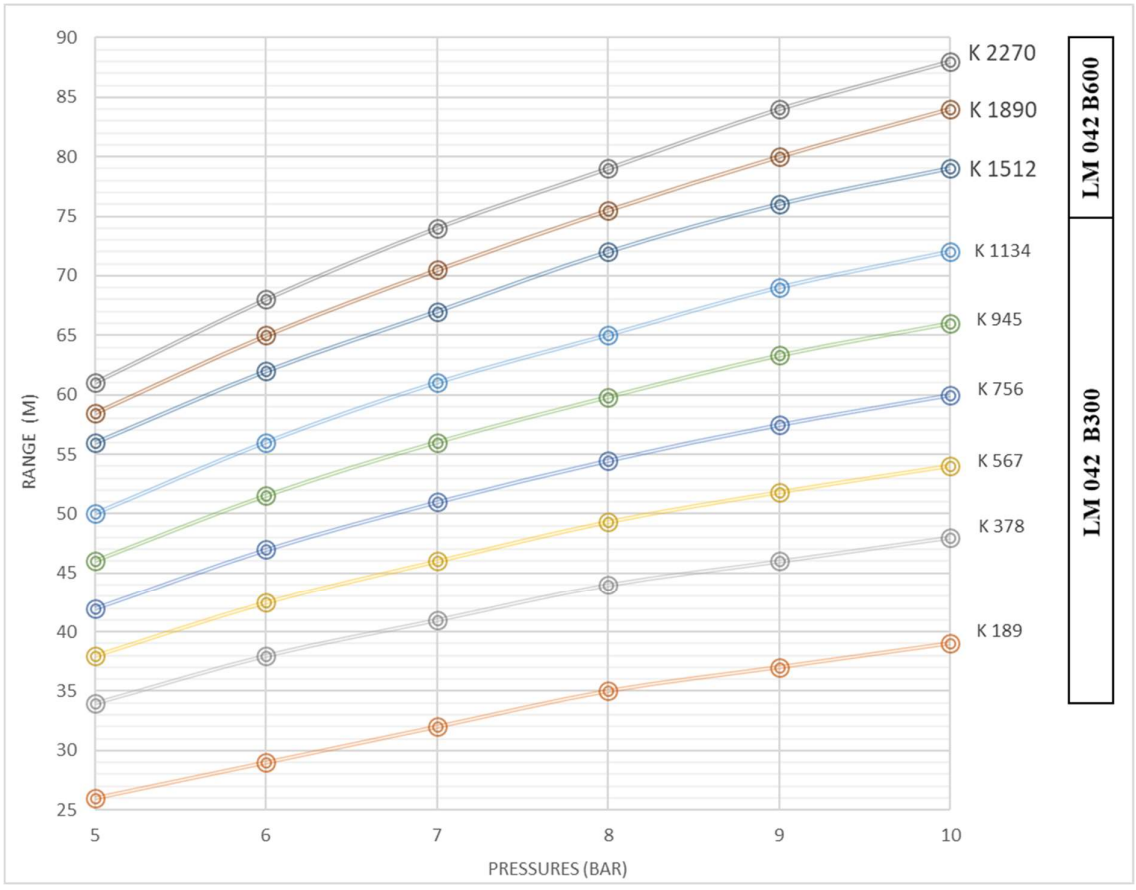

WATER BRANCHPIPES SERIES SX - 050

Specific terminal for monitors for use with water

TECHNICAL DATA

Inlet flange	standard Sicurex or threaded connections on request
Jet type	Full, Dart
MATERIALS	
Flange	Carbon steel (A1), s.s. AISI 304 (B2), s.s. AISI 316 (B3)
Body and Nozzle	s.s. AISI 304 (B2), s.s. AISI 316 (B3)
FINISH	
Carbon steel parts	Painting -colour red RAL 3000
Stainless steel parts	Natural finish

DIMENSIONS

REFERENCE	FLOW RATE Lt / min	D	L mm	WEIGHT Kg
WL 050 3	800 - 3000	3" DN80	850	8,0
WL 050 4	3100 - 6000	4" DN100	850	9,0

ATTENTION : Specify working point (flow rate-pressure) when ordering

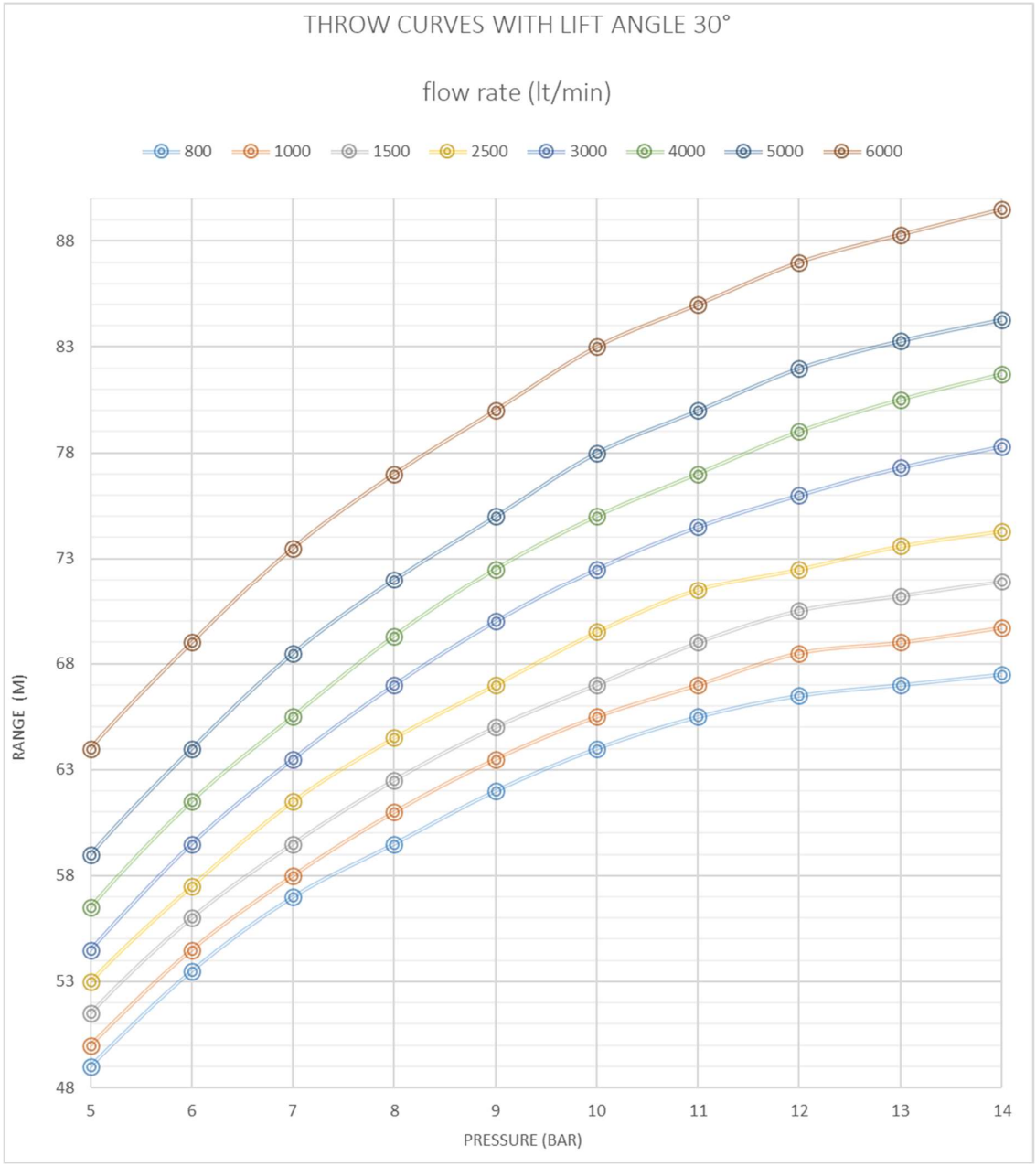
THROW CURVES WITH LIFT ANGLE 30°
flow rate (lt/min)
800
1000
1500
2500
3000
4000
5000
6000
RANGE (M)
88
83
78
73
68
63
58
53
48
5
6
7
8
9
10
11
12
13
14
PRESSURE (BAR)

STEAM PORTABLE BRANCHPIPES SERIES SX - 055

Temperature: operational 280°C - max. 315°C

TECHNICAL DATA

Ball shut-off valve diameter	1'' AISI 316
MATERIALS	
Internal Bodyand nozzle	Stainless steel AISI 304 (B3)
External Body	carbon steel with coating in PYROTEX®
Handle	Techno polymer
FINISH	
Stainless steel parts	Natural color not painted

DIMENSIONS

REFERENCE	Ø D1	L (mm)	*Weight* (kg)
LW 055 1	1" GAS F	760	6,5
LW 055 2	2" GAS F	760	9,0

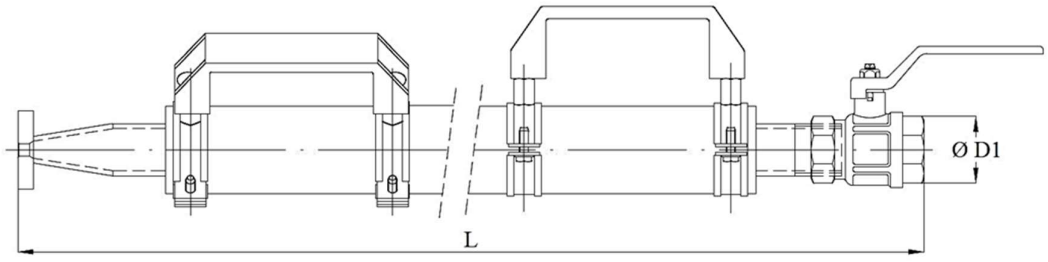

FOAM PORTABLE BRANCHPIPES SERIES SX - 056 – PA

Expansion ratio : 1:8 variable according to the type of foam used

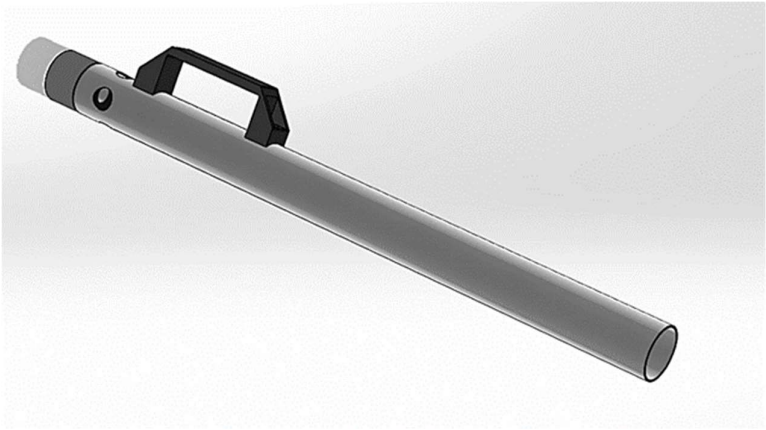

TECHNICAL DATA

Operating pressure	From 3 to 9 bar
MATERIALS	
Body	Stainless steel AISI 304 (B2), 316 (B3)
Foam nozzle	Aluminium alloy (V1)
Handle	Techno polymer
FINISH	
Stainless steel parts	Brushed surface

DIMENSIONS

REFERENCE	FLOW RATE Lt / min @5 bar	Range (m)	A	B	L (mm)	WEIGHT Kg
LM 052 PA32	200	22	1”1/2	UNI45	820	4,5
LM 052 PA34	400	24	2”	UNI70	820	6,0
LM 052 PA36	600	27	2”	UNI70	820	6,0
LM 052 PA38	800	27	2”	UNI70	820	6,0

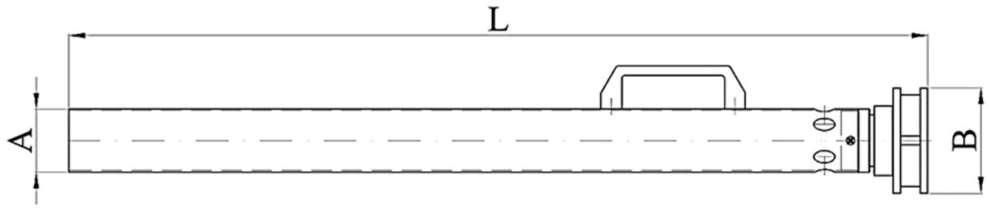

ADJUSTABLE WATER/FOAM NOZZLES SERIES SX-060 - A

Suitable for use with water or premixed foam.
Adjustable full stream and wide angle fog.

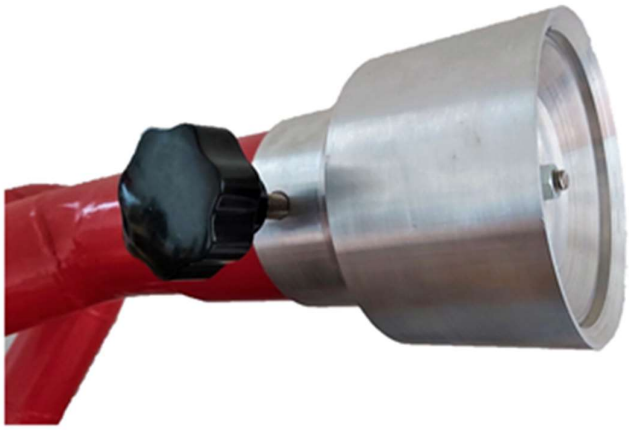

TECHNICAL DATA

Inlet	standard Sicurex flange Ø160mm, threated F GAS 2”1/2 or other connections on request
MATERIALS	
Body	bronze (T5), brass (T1), light alloy (V1), s.s. AISI 304 (B2), s.s. AISI 316 (B3)
Flange	carbon steel (A1), s.s. AISI 304 (B2), s.s. AISI 316 (B3)
FINISH	
Finish natural, only carbon steel parts painting colour red RAL 3000	

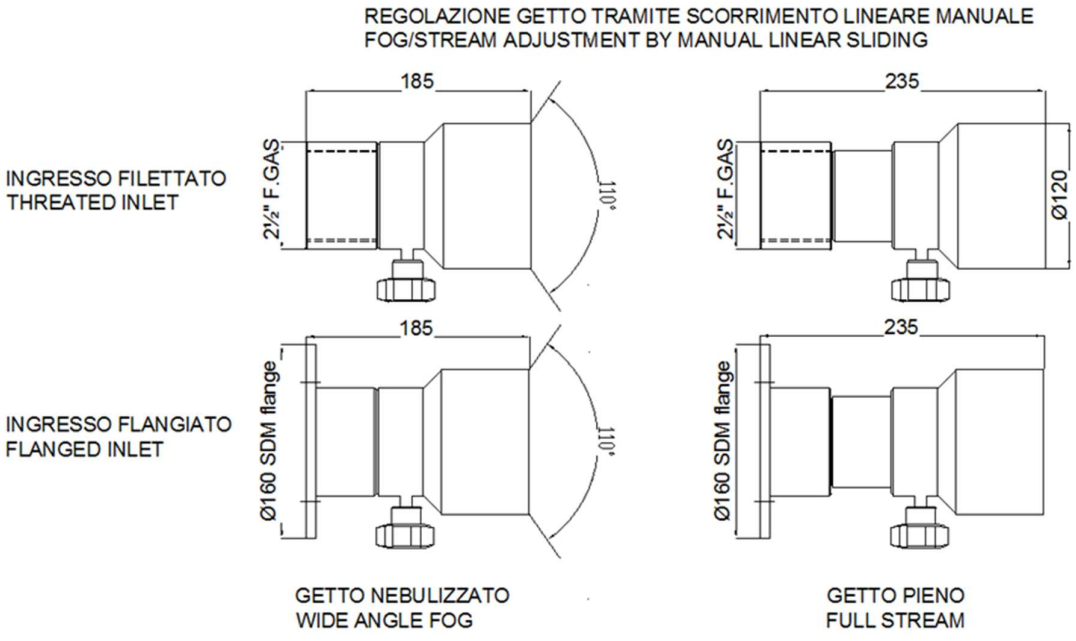

REFERENCE	Flow (Lt / Min)						
	Pressures (Bar)						
	1 (K)	5	6	7	8	9	10
WF 060 A	**189**	425	465	**500**	535	570	600
	378	845	925	**1000**	1070	1135	1195
	567	1270	1390	**1500**	1605	1700	1795
	756	1690	1850	**2000**	2140	2270	2390
	945	2115	2315	**2500**	2675	2835	2990
	1134	2535	2775	**3000**	3205	3400	3585
	1512	3380	3705	**4000**	4275	4535	4780
	1890	4225	4630	**5000**	5345	5670	5975
	2270	5070	5555	**6000**	6415	6805	7170

Other flow and pressure on request.

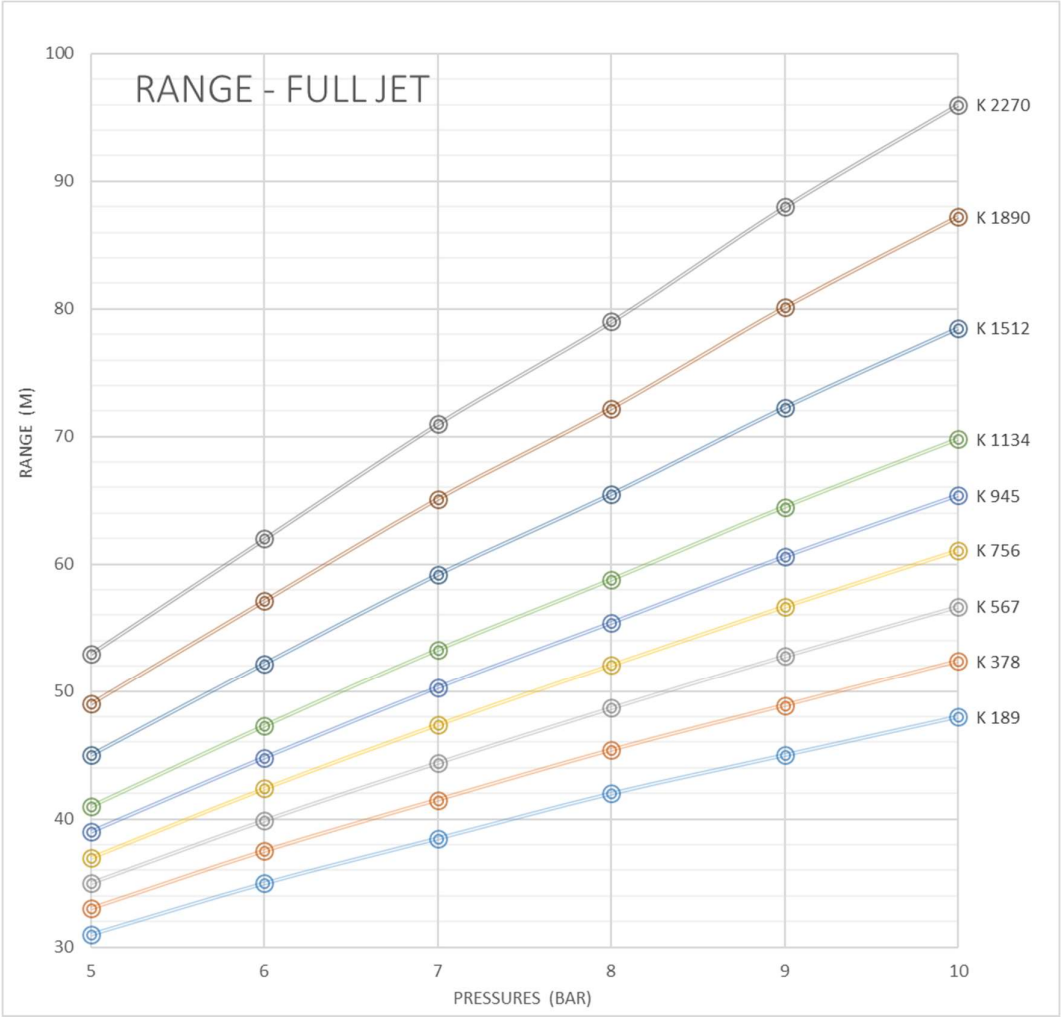

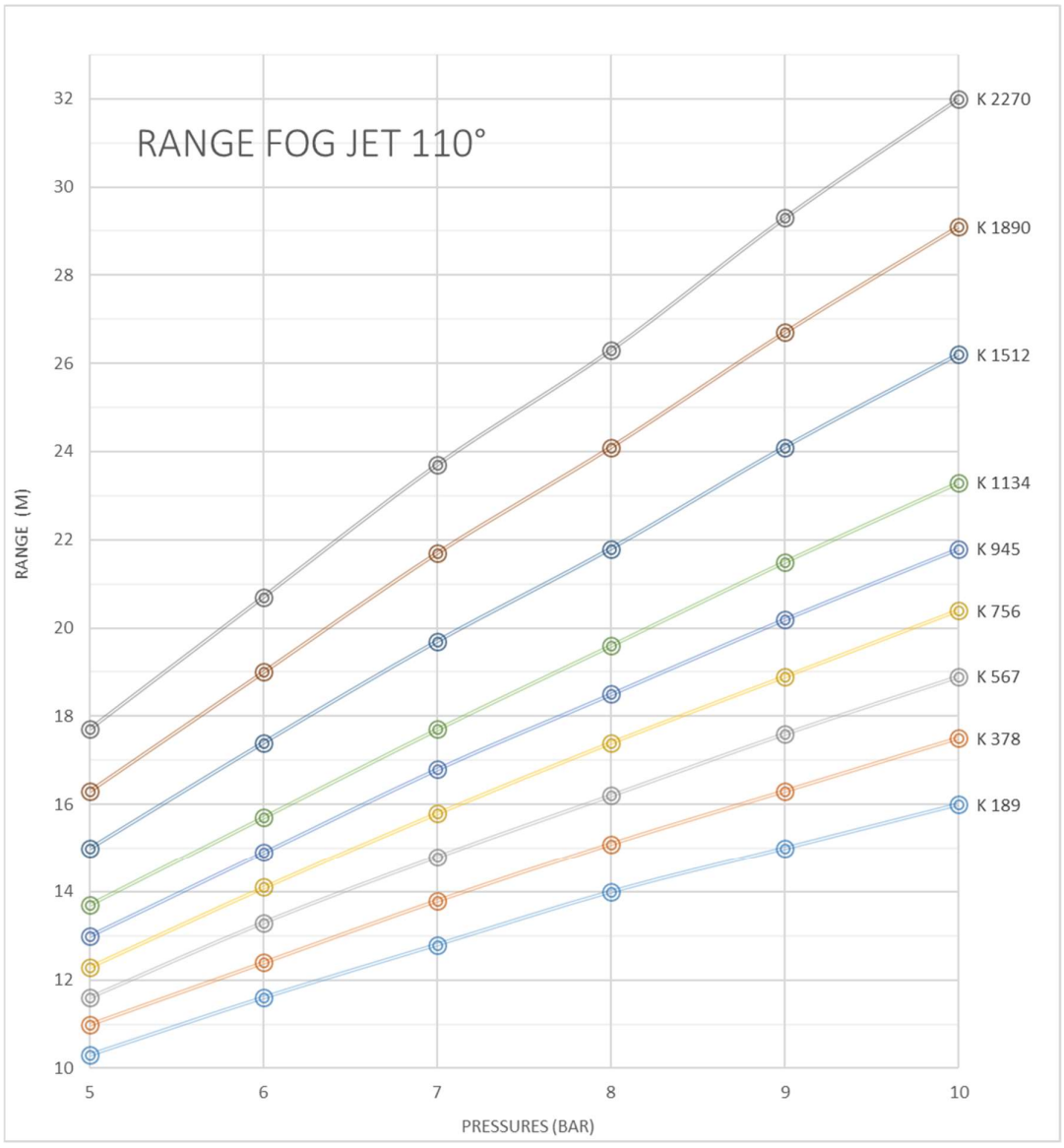
RANGE FOG JET 110°
RANGE (M)
PRESSURES (BAR)
32
30
28
26
24
22
20
18
16
14
12
10
5
6
7
8
9
10
K 2270
K 1890
K 1512
K 1134
K 945
K 756
K 567
K 378
K 189

SELF_SUCKING WATER/FOAM NOZZLES SERIES SX-061 - B

Suitable for use with water or premixed foam.
Adjustable full stream and wide angle fog.
Mixing rate 3% ~ 6%

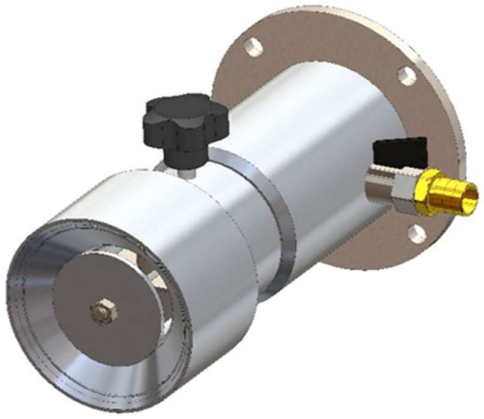

TECHNICAL DATA

Inlet	standard Sicurex flange Ø160mm, threated F GAS 2”1/2 or other connections on request
Mixing rate	3% - 6%
Aspiration pipe	150 cm spiral hose
Operating pressure	Minimum 0,5 Bar
MATERIALS	
Body	bronze (T5), brass (T1), light alloy (V1), s.s. AISI 304 (B2), s.s. AISI 316 (B3)
Flange	carbon steel (A1), s.s. AISI 304 (B2), s.s. AISI 316 (B3)
FINISH	
Finish natural, only carbon steel parts painting colour red RAL 3000	

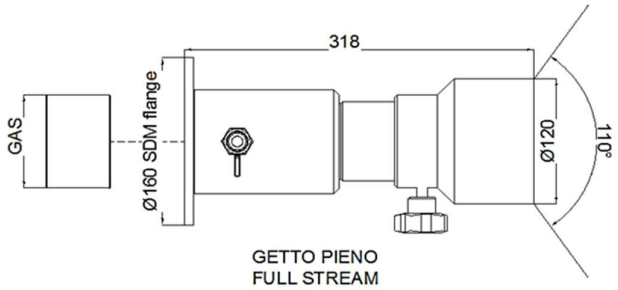

GETTO PIENO
FULL STREAM

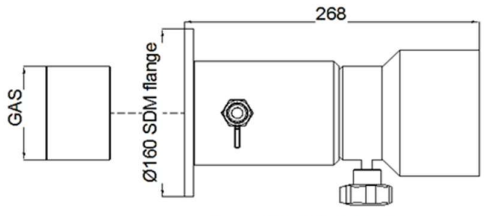

GETTO NEBULIZZATO
WIDE ANGLE FOG

REFERENCE	*FLOW RATE* (Ltr. / min)						
	PRESSURES (bar)						
	1 (K)	5	6	7	8	9	10
WF 061 B	**189**	425	465	**500**	535	570	600
	378	845	925	**1000**	1070	1135	1195
	567	1270	1390	**1500**	1605	1700	1795
	756	1690	1850	**2000**	2140	2270	2390
	945	2115	2315	**2500**	2675	2835	2990
	1134	2535	2775	**3000**	3205	3400	3585
	1512	3380	3705	**4000**	4275	4535	4780
	1890	4225	4630	**5000**	5345	5670	5975
	2270	5070	5555	**6000**	6415	6805	7170

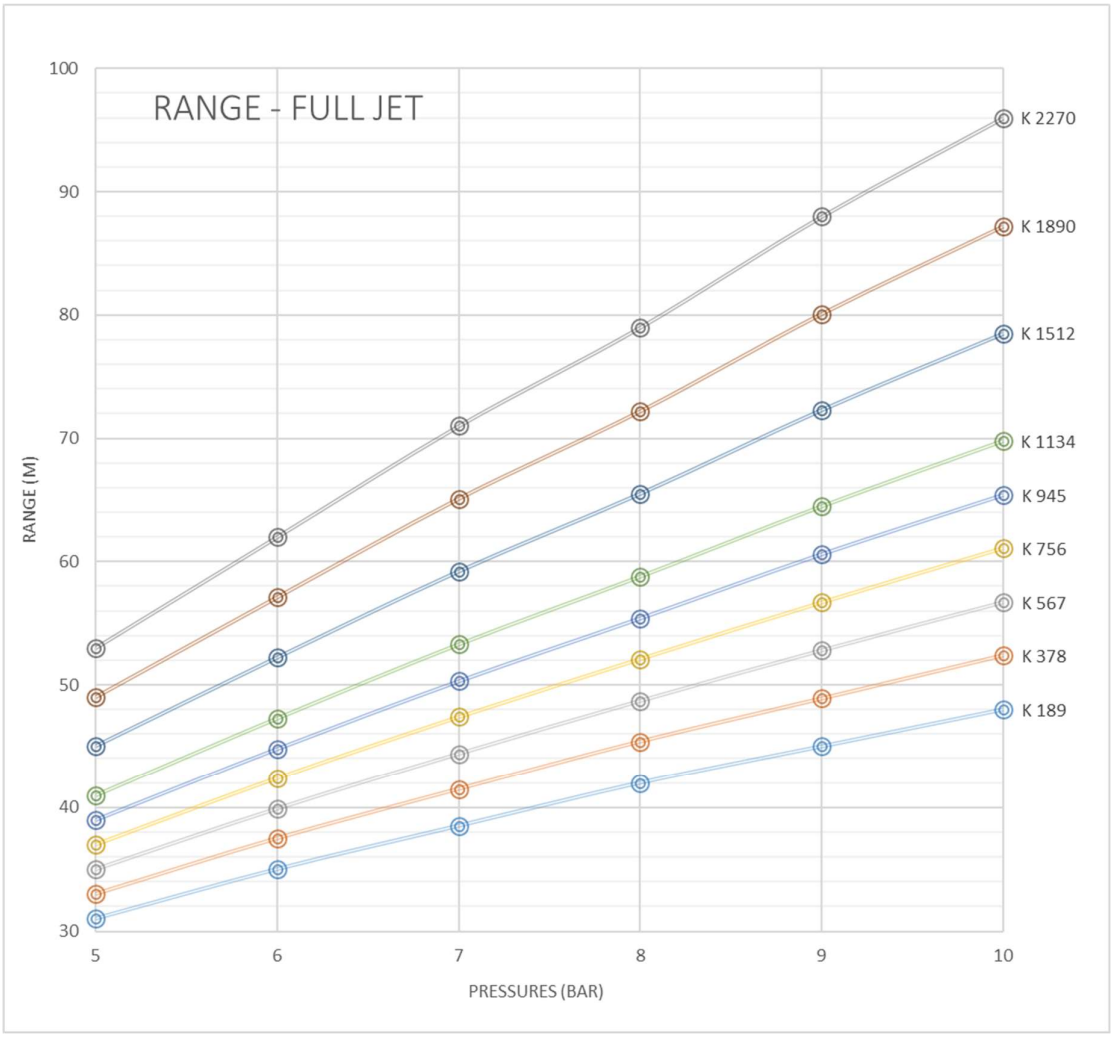

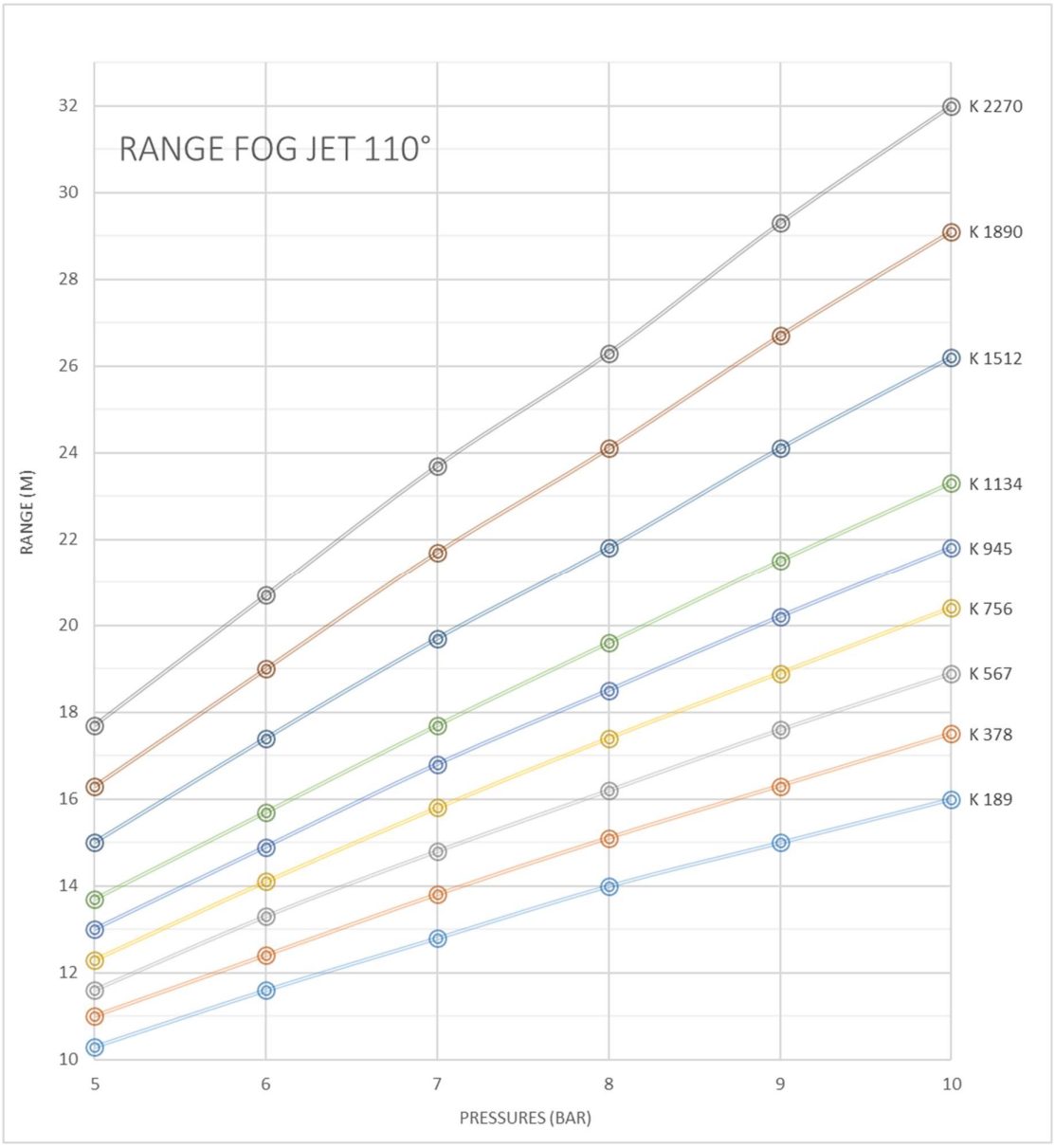
RANGE FOG JET 110°
RANGE (M)
PRESSURES (BAR)
32
30
28
26
24
22
20
18
16
14
12
10
5
6
7
8
9
10
K 2270
K 1890
K 1512
K 1134
K 945
K 756
K 567
K 378
K 189

ADJUSTABLE ELECTRIC FOAM or WATER SERIES SX-062 - E

Suitable for use with water or premixed foam.
Adjustable full stream and wide angle fog.

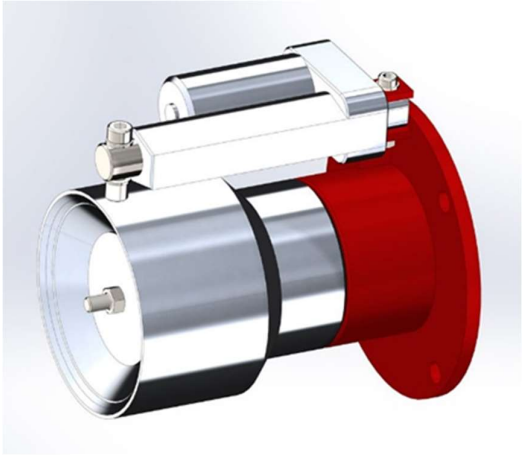

TECHNICAL DATA

Inlet	Standard Sicurex flange Ø160mm, threated F GAS 2”1/2 or other connections on request
Adjustment piston	Electric actuator
MATERIALS	
Body	bronze (T5), brass (T1), brass (T1),light alloy (V1), s.s. AISI 304 (B2), s.s. AISI 316 (B3)
Flange	carbon steel (A1), s.s. AISI 304 (B2), s.s. AISI 316 (B3)
FINISH	
Finish natural, only carbon steel parts painting colour red RAL 3000	

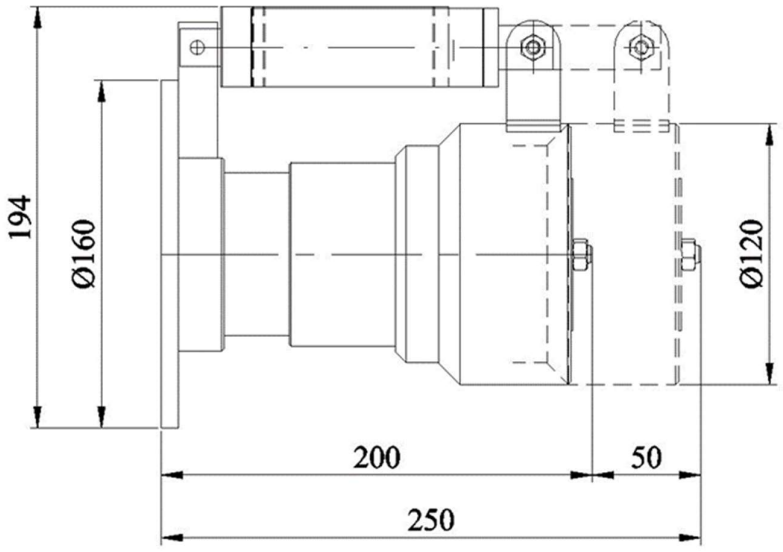

REFERENCE	SUPPLY VOLTAGE	POWER CONSUMPTION	CURRENT CONSUMPTION	IP PROTECTION	WEIGHT (kg)
WF 062 E	12Vdc	80 W	6,6 A	IP65	9,0

REFERENCE	FLOW RATE (Ltr. / Min)						
	PRESSURES (Bar)						
	1 (K)	5	6	7	8	9	10
WF 062 E	189	425	465	500	535	570	600
	378	845	925	1000	1070	1135	1195
	567	1270	1390	1500	1605	1700	1795
	756	1690	1850	2000	2140	2270	2390
	945	2115	2315	2500	2675	2835	2990
	1134	2535	2775	3000	3205	3400	3585
	1512	3380	3705	4000	4275	4535	4780
	1890	4225	4630	5000	5345	5670	5975
	2270	5070	5555	6000	6415	6805	7170

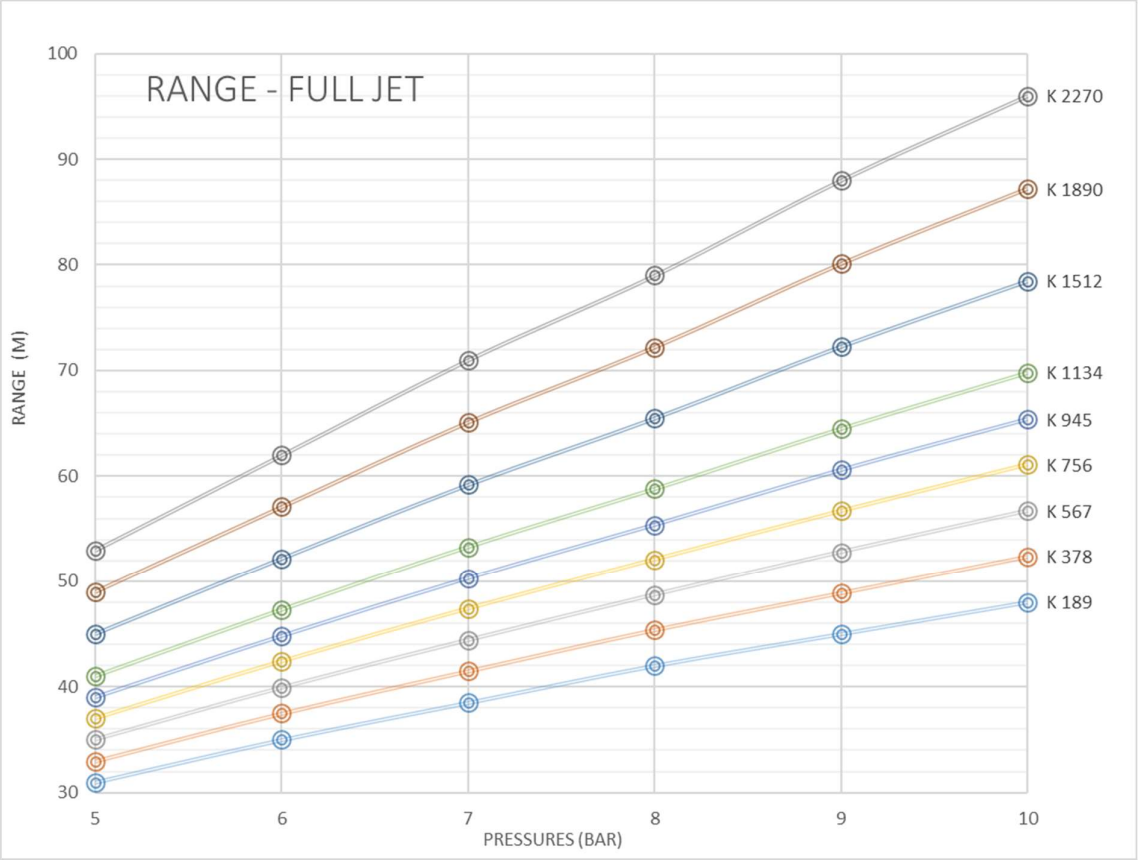

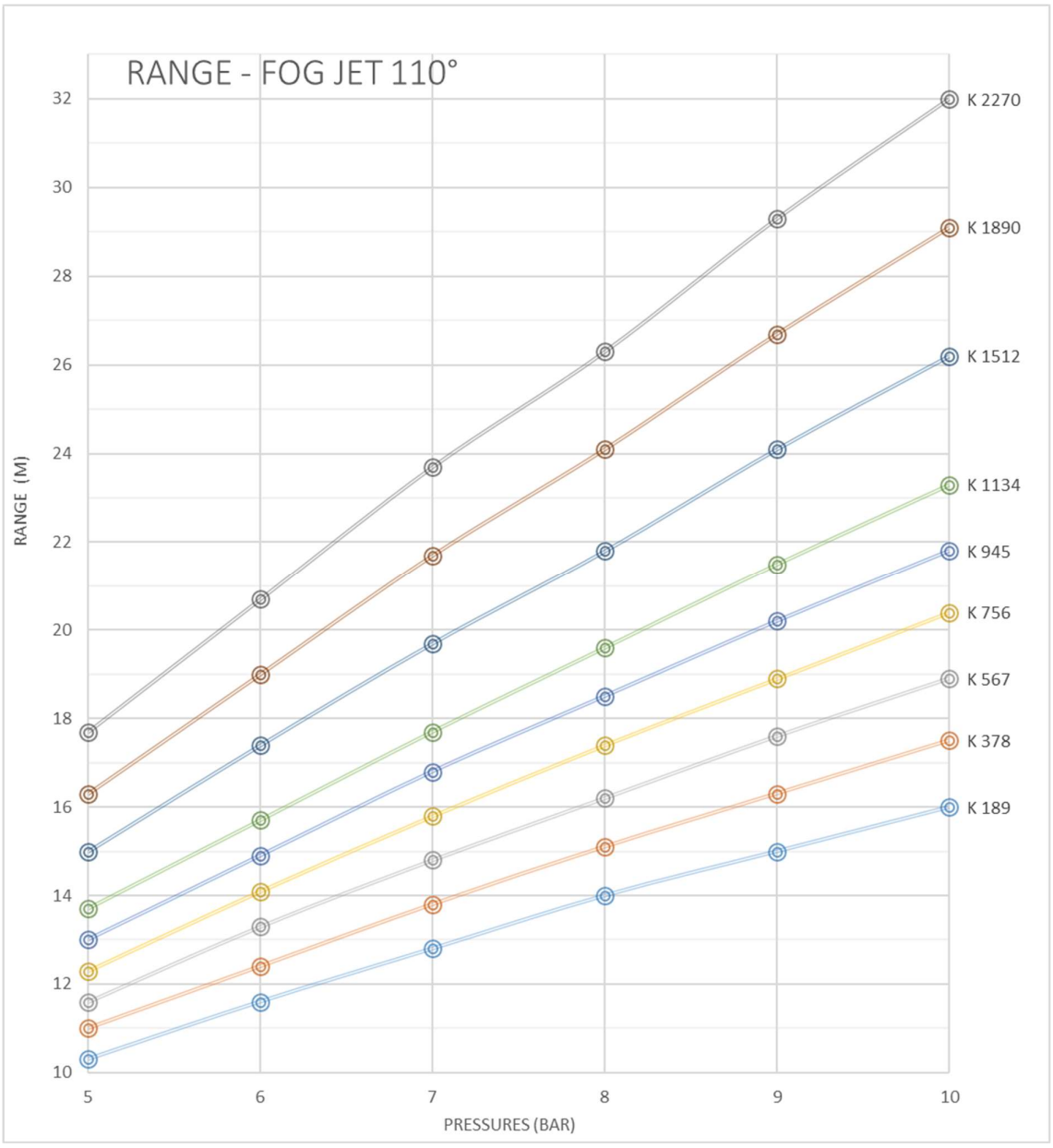
RANGE - FOG JET 110°
RANGE (M)
PRESSURES (BAR)
32
30
28
26
24
22
20
18
16
14
12
10
5
6
7
8
9
10
K 2270
K 1890
K 1512
K 1134
K 945
K 756
K 567
K 378
K 189

ADJUSTABLE ELECTRIC FOAM or WATER SERIES SX-063 – E Ee-XD

Suitable for use with water or premixed foam.
Adjustable full stream and wide angle fog.

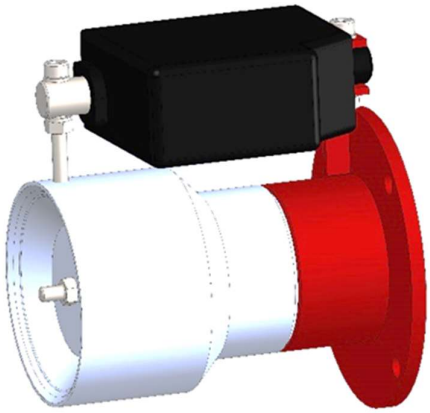

TECHNICAL DATA

Inlet	Standard Sicurex flange Ø160mm, threated F GAS 2”1/2 or other connections on request
Adjustment piston	Electric actuator Ee-XD
MATERIALS	
Body	bronze (T5), brass (T1), brass (T1),light alloy (V1), s.s. AISI 304 (B2), s.s. AISI 316 (B3)
Flange	carbon steel (A1), s.s. AISI 304 (B2), s.s. AISI 316 (B3)
FINISH	
Finish natural, only carbon steel parts painting colour red RAL 3000	

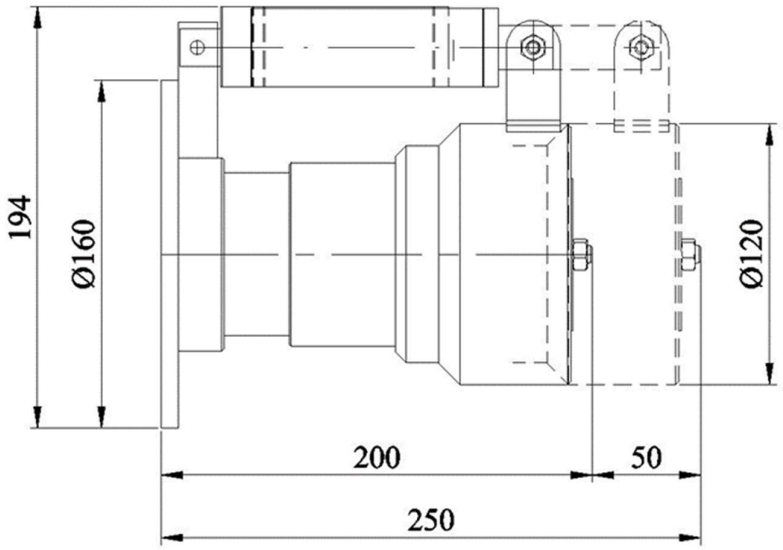

REFERENCE	SUPPLY VOLTAGE	POWER CONSUMPTION	CURRENT CONSUMPTION	IP PROTECTION	WEIGHT (kg)
WF 063 E Ee-XD	12Vdc	50 W	4,6 A	IP66	9,0

REFERENCE	FLOW RATE (Ltr. / Min)						
	PRESSURES (Bar)						
	1 (K)	5	6	7	8	9	10
WF 062 E Ee-XD	189	425	465	500	535	570	600
	378	845	925	1000	1070	1135	1195
	567	1270	1390	1500	1605	1700	1795
	756	1690	1850	2000	2140	2270	2390
	945	2115	2315	2500	2675	2835	2990
	1134	2535	2775	3000	3205	3400	3585
	1512	3380	3705	4000	4275	4535	4780
	1890	4225	4630	5000	5345	5670	5975
	2270	5070	5555	6000	6415	6805	7170

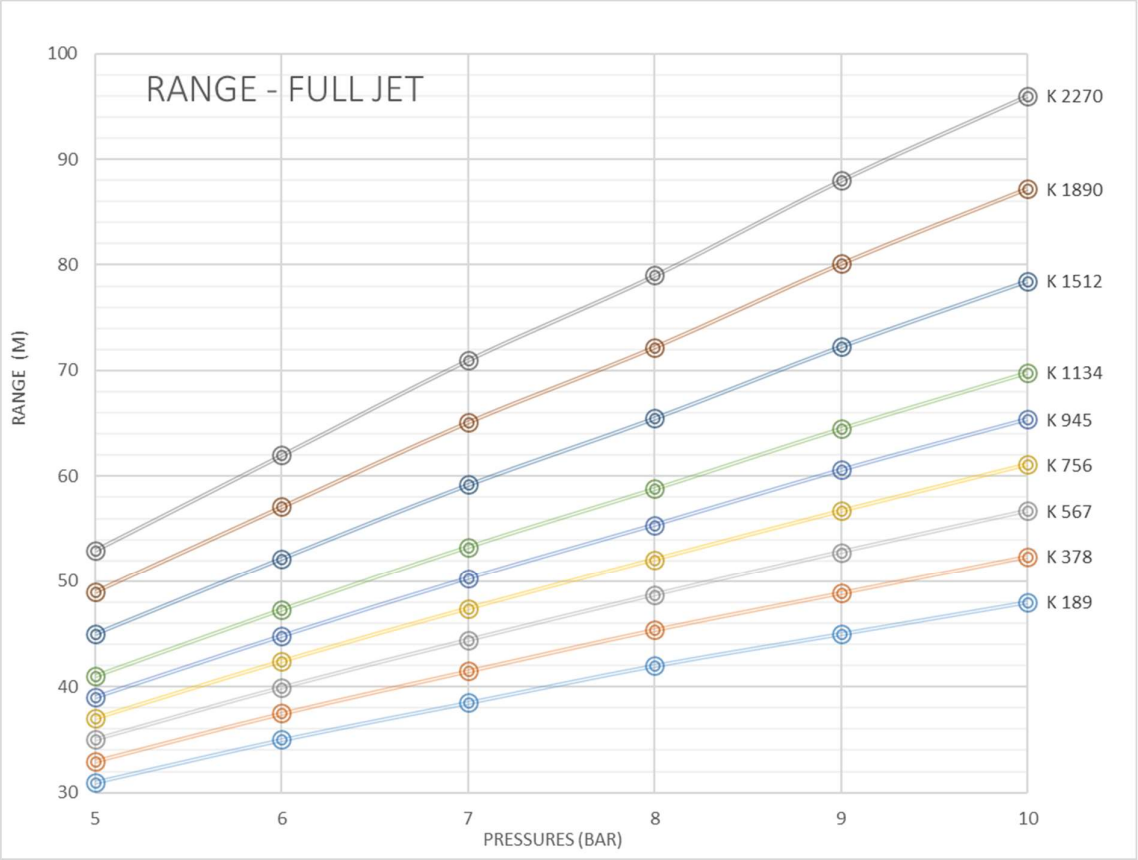

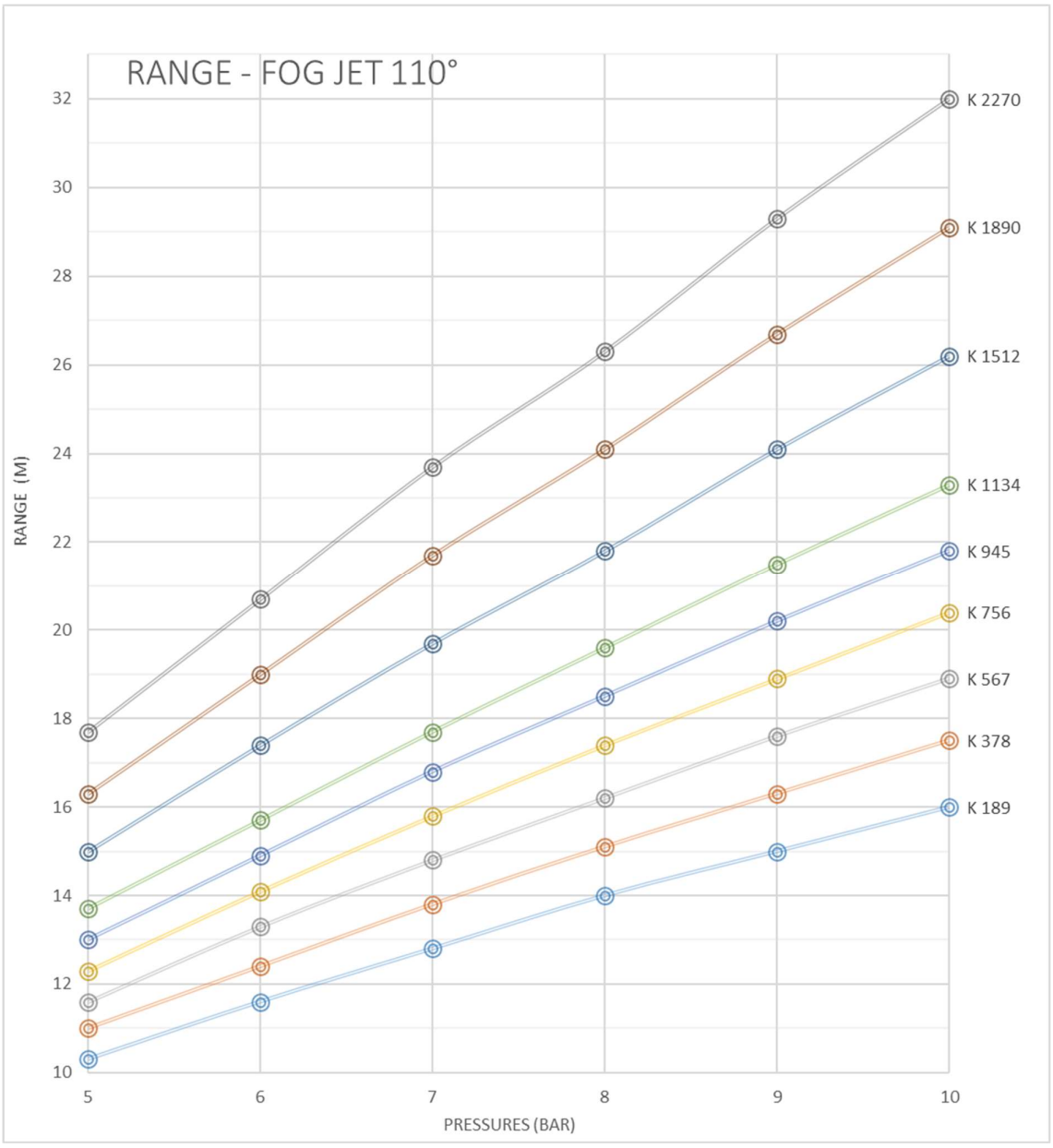
RANGE - FOG JET 110°
RANGE (M)
PRESSURES (BAR)
32
30
28
26
24
22
20
18
16
14
12
10
5
6
7
8
9
10
K 2270
K 1890
K 1512
K 1134
K 945
K 756
K 567
K 378
K 189

FOAM CHAMBERS SX-070 – A

Foam Chamber sets are an integral part of tank farm fire protection systems.
FLOW RATE RANGE : 200 to 2000 Ltr. / Min
FLOW RATE RANGE : 2100 to 3000 Ltr. / Min ON REQUEST
EXPANSION RATE : indicatively 1:5 (value according to the type of foam used)

TECHNICAL DATA

Inlet	ANSI 150 RF or UNI - DIN flange
Outlet	ANSI 150 RF or UNI - DIN flange
MATERIALS	
Body	carbon steel (A1), AISI 304 (B2), AISI 316 (B3)
Flange	carbon steel (A1), AISI 304 (B2), AISI 316 (B3)
Nozzle	carbon steel (A1), AISI 304 (B2), AISI 316 (B3)
Vapor seal group	Glass and rubber
FINISH	
Only carbon steel parts painting colour red RAL 3000	
OPTION	
Calibrated break disc	

REFERENCE	FLOW RATE (Ltr/min @ 5 bar)	A (mm)	B (mm)	C (mm)	d	D	WEIGHT (Kg)
FC 070 A020	200	950	650	230	2”	3”	32
FC 070 A040	400	950	650	230	2”	4” - 5”	36
FC 070 A080	800	950	650	230	4”	6”	75
FC 070 A150	1500	1200	800	360	4”	8”	85
FC 070 A200	2000	1200	800	360	4”	10”	100

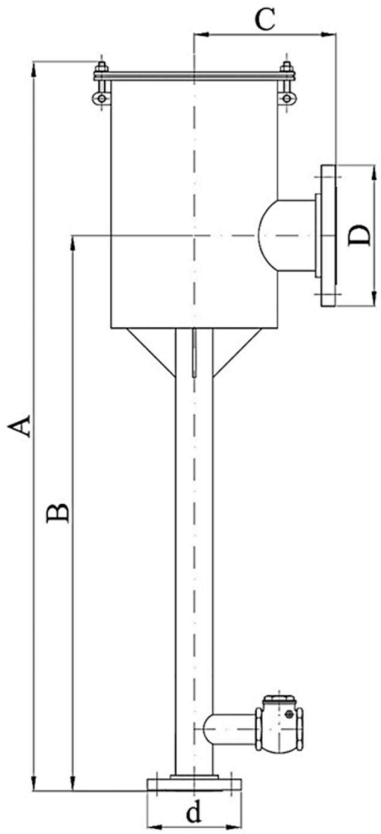

FOAM POURERS SX-080 – B

Foam pourer sets are an integral part of tank farm fire protection systems.

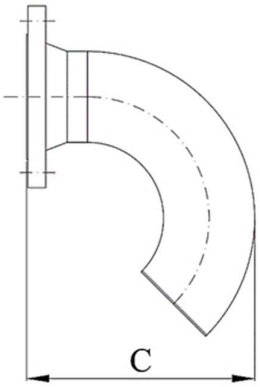

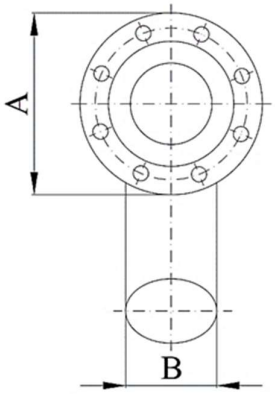

TECHNICAL DATA

Inlet	ANSI 150 RF or UNI - DIN flange
Protective anti sparrow net in stainless steel	
MATERIALS	
Body	Carbon steel (A1), AISI 304 (B2), AISI 316 (B3)
Flange	Carbon steel (A1), AISI 304 (B2), AISI 316 (B3)
FINISH	
Only carbon steel parts painting colour red RAL 3000	
Stainless steel parts brushed	
OPTION	
Calibrated break disc	

REFERENCE	A	B	C (mm)		*Weight* (Kg)
			ANSI	UNI	
FP 080 B020	3”	3”	230	210	7,0
FP 080 B040	4”	4”	290	265	14,0
FP 080 B080	6”	6”	405	370	26,0
FP 080 B150	8”	8”	520	470	54,0
FP 080 B200	10”	10”	620	570	77,0

DINAMIC FOAM POURERS SX-081 – C and SH

Foam pourer sets are an integral part of tank farm fire protection systems.

FP 081 C WELDED

FP 081 SH FROM FUSION

TECNICAL DATA		TECHNICAL DATA	
Inlet	Flange ANSI 150 RF or UNI - DIN	Inlet	flange ANSI 150 RF or UNI – DIN
MATERIAL		MATERIAL	
Body	carbon steel (A1), s.s. AISI 304 (B2), s.s. AISI 316 (B3)	Body	Delta brass (T1)
Flange material	carbon steel (A1), s.s. AISI 304 (B2), s.s. AISI 316 (B3)	Flange	ASTM A 105 - AISI 304/316
FINISH		FINISH	
Painting colour red RAL 3000		Painting colour red RAL 3000	

REFERENCE	ØA (mm)	B (mm)	C (mm)	Weight (Kg)
FP 081 C020	4"	300	420	7,0
FP 081 C040	6"	300	485	10,0
FP 081 SH 4	4"	313	430	19,0
FP 081 SH 6	6"	315	430	22,0

FP 081 C WELDED

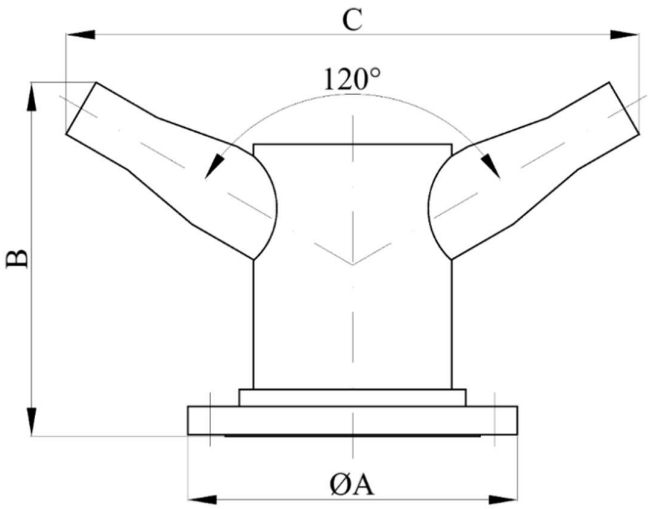

FP 081 SH FROM FUSION

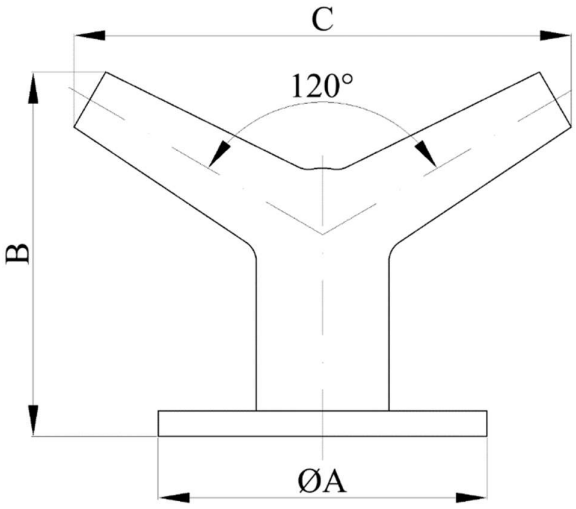

FOAM MAKER-POURER SX-082 – D

Suitable for the protection of ring seals of floating roof tanks.
Flow rates adjustable on request

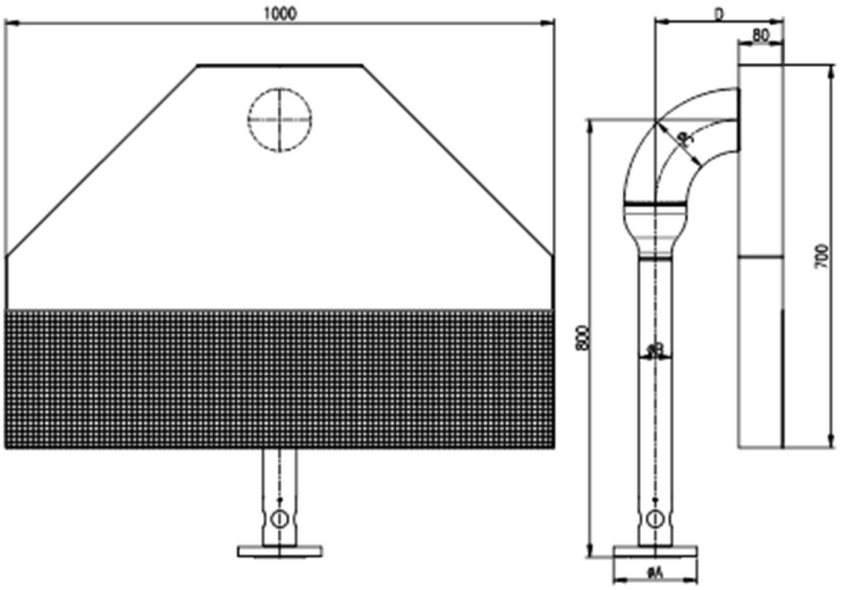

TECHNICAL DATA

Inlet	Flange ANSI 150 RF or UNI - DIN
MATERIALS	
Body	Carbon steel (A1), AISI 304 (B2), AISI 316 (B3)
Flange	Carbon steel, AISI 304/316
FINISH	
Carbon steel version: painting, colour red RAL 3000 Stainless steel version: Brushed surface finish	

REFERENCE	FLOW RATE Ltr / min	A mm	B mm	C mm	D mm	WEIGHT Kg
FMP 082 D 020	200	2”	2”	3”	195	8,0
FMP 082 D 040	400	2”	2”	3”	195	8,0
FMP 082 D 080	800	4”	4”	6”	309	12,0

MEDIUM EXPANSION FOAM NOZZLE SX-090 – M - F

Expansion ratio : 1:60
SX-90 - M : for flanged nozzles
SX-90 - F : for portable nozzles with coupling

TECHNICAL DATA

Inlet	Flange ANSI 150 RF or UNI - DIN
MATERIALS	
Body	AISI 304 (B2)
Nozzle	AISI 304 (B2)
Flange	Carbon steel - AISI 304
FINISH	
Carbon steel version: painting, colour red RAL 3000 Stainless steel : Brushed surface finish	

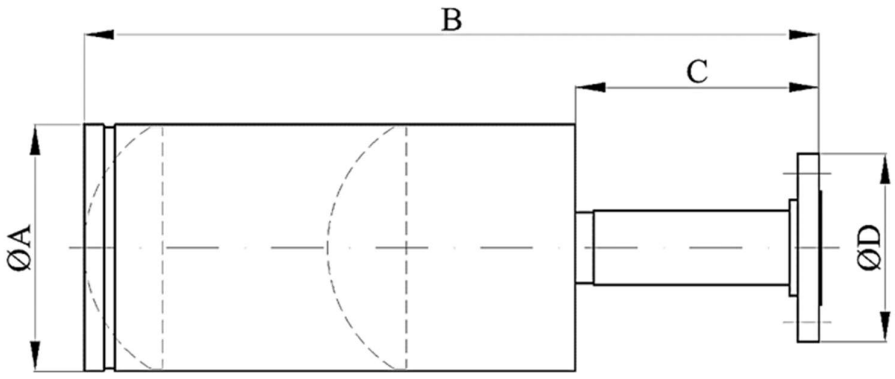

REFERENCE	FLOW RATE (Ltr /min @ 5 bar)	ØD		ØA (mm)	B (mm)	C (mm)	*Weight* (Kg)
MEFN 090 -M-F320	200	flange 1 1/2"	UNI 45-70	204	550	150	7,0
MEFN 090 -M-F340	400	flange 2"	UNI 45-70	204	550	150	8,0
MEFN 090 -M-F360	600	flange 2"	UNI 70	204	550	150	10,0
MEFN 090 -M-F380	800	flange 3"	UNI 70	400	800	150	18,0
MEFN 090 -F400	1000	flange 3"		400	800	150	18,0
MEFN 090 -F420	1200	flange 3"		400	800	150	18,0
MEFN 090 -F460	1600	flange 3"		400	800	150	18,0

HIGH EXPANSION FOAM GENERATOR SX-100

Suitable to be employed with foaming for hot fumes
EXPANSION RATE 1:700

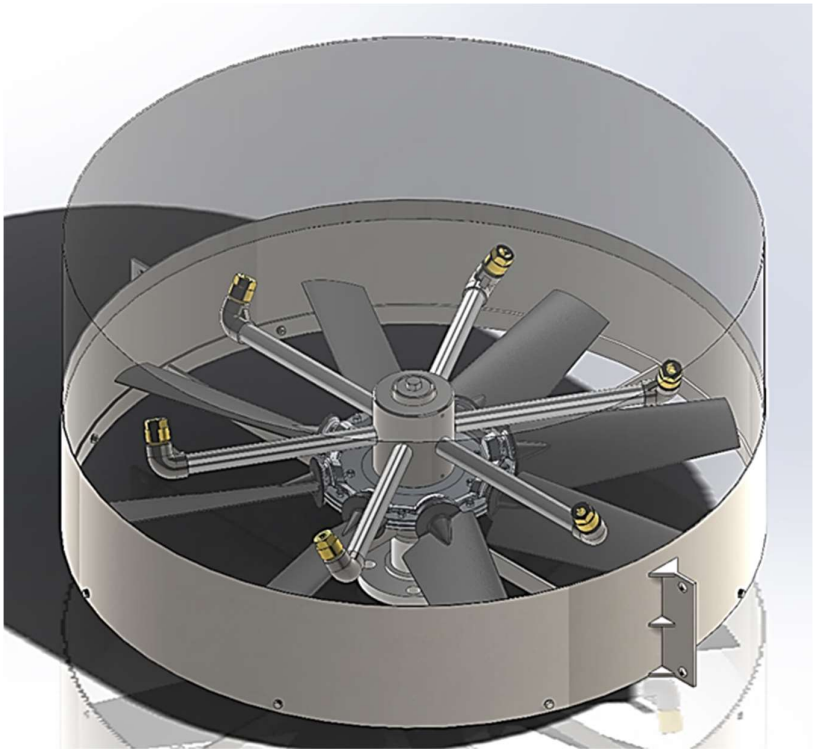

TECHNICAL DATA

Fan	glass fiber with light alloy shaft
Inlet	flanged ANSI 150 RF or UNI – DIN or threaded 2" Gas male
Expansion ratio	1 : 700
MATERIALS	
Body	carbon steel (A1), AISI 304 (B2)
Flange	carbon steel (A1), AISI 304 (B2)
FINISH	
Carbon steel version: painting, colour red RAL 3000 Inox version: Brushed finish	

REFERENCE	*FLOW RATE* (Ltr /min @ 5 bar)	COUPLING	WEIGHT (Kg)
HEFG 100 3200	200	flange 2" – UNI45/70	65,0
HEFG 100 3400	400	flange 2" – UNI45/70	65,0

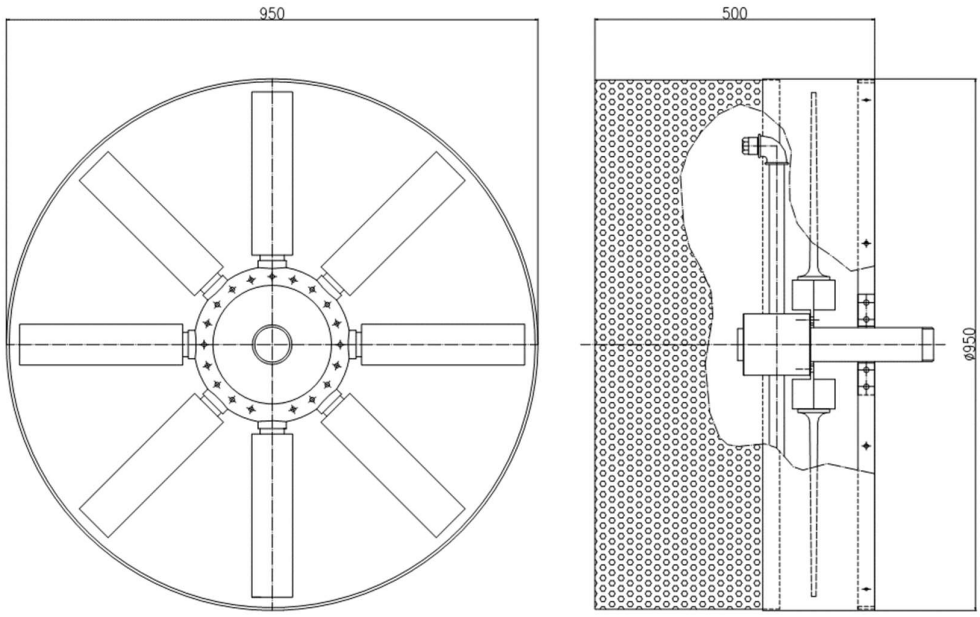

HIGH EXPANSION FOAM GENERATOR SX-105

Suitable to be employed with foaming for hot fumes
EXPANSION RATE 1:750

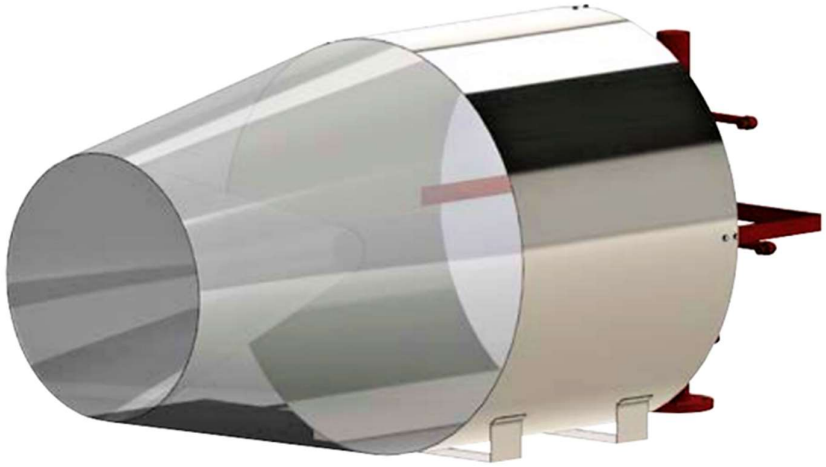

TECHNICAL DATA

Inlet	flanged ANSI 150 RF or UNI – DIN, threaded 2”1/2 GAS male or grooved
Expansion ratio	1 : 750
MATERIALS	
Body	carbon steel (A1), AISI 304 (B2)
Flange	carbon steel (A1), AISI 304 (B2)
FINISH	
Carbon steel version: painting, colour red RAL 3000 Inox version: Brushed finish	

REFERENCE	*FLOW RATE* (Ltr /min @ 5 bar)	D1	D2 mm	WEIGHT (Kg)
HEFG 105 3200	200	2” ½	930	65,0
HEFG 105 3400	400	2” ½	930	65,0

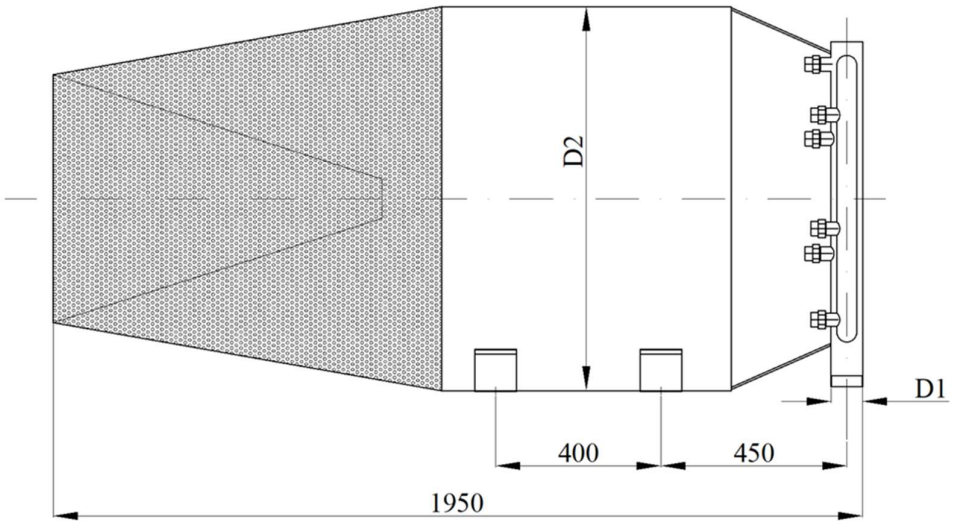
D2
D1
400
450
1950

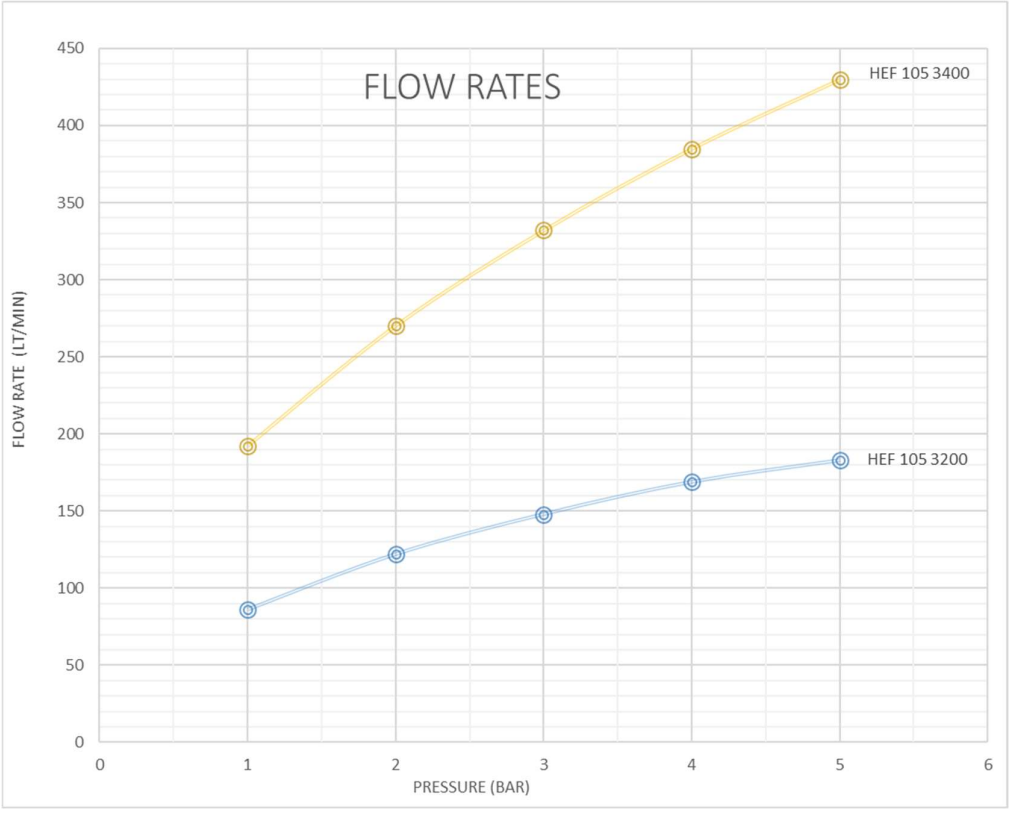
FLOW RATES
HEF 105 3400
HEF 105 3200
FLOW RATE (LT/MIN)
PRESSURE (BAR)
0
50
100
150
200
250
300
350
400
450
0
1
2
3
4
5
6

HIGH EXPANSION FOAM GENERATOR SX-106

Suitable to be employed with foaming for hot fumes
EXPANSION RATE : 1:450

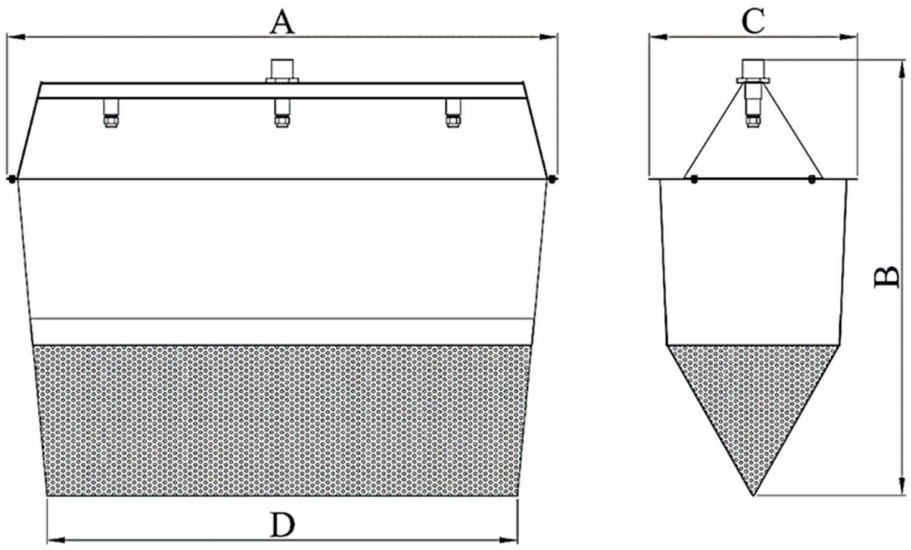

TECHNICAL DATA

Inlet	threaded 1" GAS female
Mixture flow rate	105 Ltr / min @ 5 Bar
Expansion ratio	1 : 450
MATERIALS	
Body	carbon steel (A1), s.s. AISI 304 (B2), s.s. AISI 316 (B3)
FINISH	
Carbon steel version: painting, colour red RAL 3000 Inox version: Brushed finish	

REFERENCE	*FLOW RATE* (Ltr /min @ 5 bar)	A mm	B mm	C mm	D mm	WEIGHT (Kg)
HEFG 106 3100	105	1030	815	390	880	20

LOW EXPANSION FOAM BRANCHIPIPES SERIES SX-110

WORKING PRESSURE 5.0 Bar
EXPANSION RATIO 1:5
Special versions with IN-OUT flow rate, diameter, and different operating pressure on request.

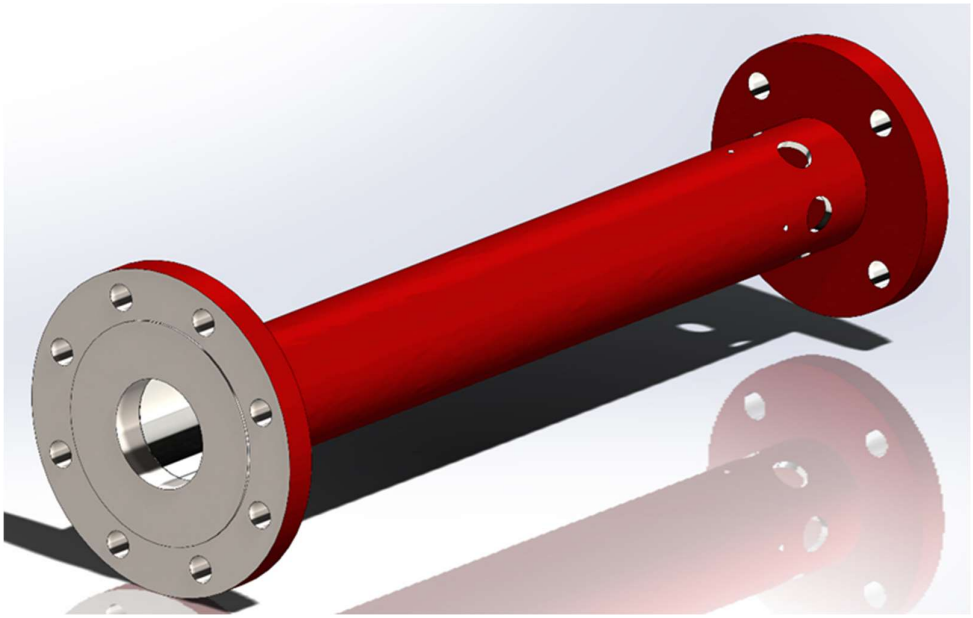

TECHNICAL DATA	
Inlet	Flanged ANSI 150 RF or UNI – DIN
Working pressure	5,0 Bar
Expansion ratio	1:5
MATERIALS	
Body	carbon steel (A1), AISI 304 (B2), AISI 316 (B3)
Flange	carbon steel (A1), AISI 304 (B2), AISI 316 (B3)
FINISH	
Carbon steel version: painting colour red RAL 3000	
Stainless steel parts :Brushed surface	
OPTIONAL	
AISI 304 stainless steel net to protect the holes on the lance body	

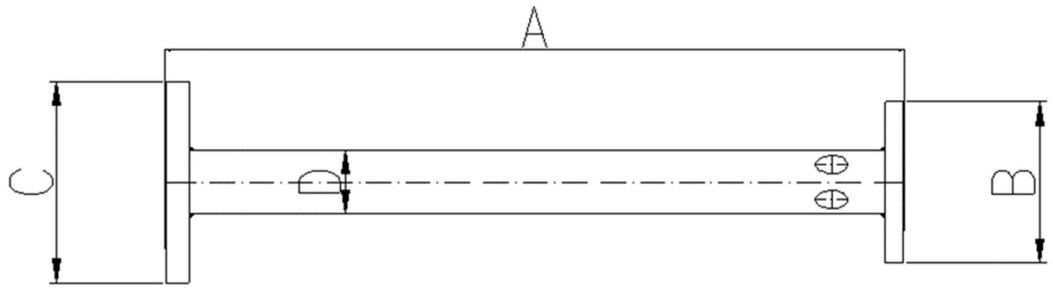

REFERENCE	*FLOW RATE* (Ltr / min)	A (mm)	B	C	D	Weight (Kg)
LEFB 110 2	200	700	2"	3"	2"	12,0
LEFB 110 4	400	700	2"	4"	2"	12,0
LEFB 110 6	600	700	3"	4"	3"	18,0
LEFB 110 8	800	700	3"	4"	3"	18,0
LEFB 110 10	1000	1000	3"	4"	3"	18,0
LEFB 110 15	1500	1000	4"	6"	4"	33,0
LEFB 110 30	3000	1000	6"	8"	6"	38,0

HIGH BACK PRESSURE FOAM SERIES SX-112

Suitable for use on flammable liquids tanks, by sub-superficial low expansion foam injection and designed to overcome the back pressure caused by the liquid head into the tank.

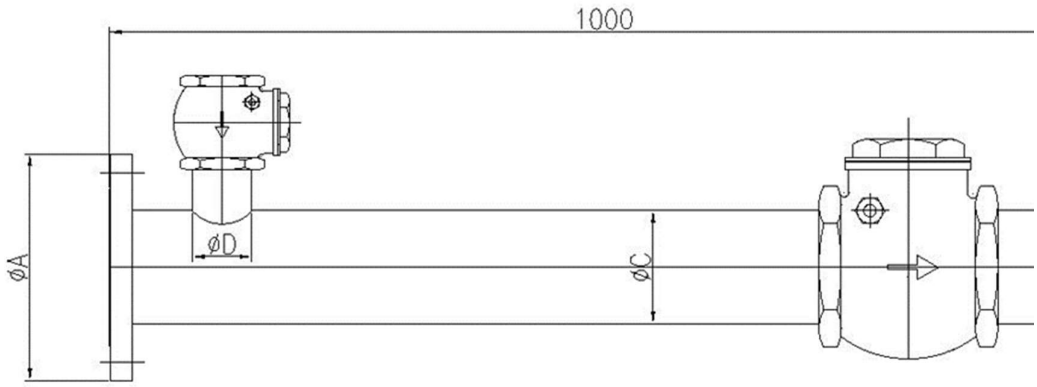

TECHNICAL DATA	
Inlet	flanged ANSI 150 RF or UNI – DIN
Check valve material	bronze
Working pressure	6,0 Bar min
MATERIALS	
Body	Carbon Steel (A1), AISI 304 (B2), AISI 316 (B3)
Flange	Carbon Steel - AISI 304/316
FINISH	
Carbon steel version: painting colour red RAL 3000	
Stainless steel parts :Brushed surface	

REFERENCE	INLET FLANGE A ⌀	OUTLET FLAGE B ⌀	BODY C ⌀	AIR SUCTION D ⌀	FLOW RATE Ltr / Min
HBPF 112 2	2" DN 50 PN16	3" DN80 PN16	2" DN50	1" DN25	150 -700
HBPF 112 3	3" DN80 PN16	4" DN100 PN16	3" DN80	1 ½" DN40	750 - 1100
HBPF 112 4	4" DN100 PN16	6" DN150 PN16	4" DN100	2" DN50	1200 - 2900
HBPF 112 6	6" DN150 PN16	8" DN200 PN16	6" DN150	2 ½"	3000 - 4500

LOW EXPANSION FOAM NOZZLE SX-120

TECHNICAL DATA

Inlet	threaded diam. 3/4" GAS F
Working pressure	0.5 bar
Flow range	From 50 to 150 ltr / min.
MATERIALS	
Body	carbon steel (A1), AISI 304 (B2), AISI 316 (B3)
Internal net material	AISI 304 (B2), AISI 316 (B3)
FINISH	
Carbon steel version: colour red RAL 3000 Stainless steel version: brushed surface finish	

REFERENCE	Flow rate range (lt/min)	K (ltr /min @ 1 bar)	A (mm)	D	Weight (kg)
SX- 120	da 50 a 150	44,72	210	3/4" fil. GAS F	2,3

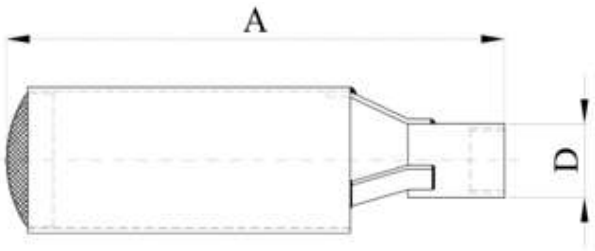

deflec

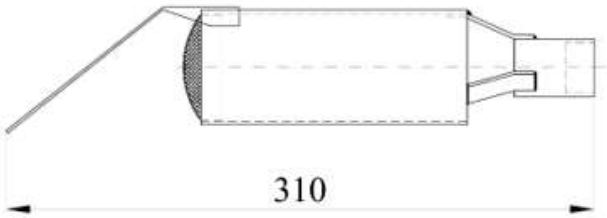

Available SX-120 D with

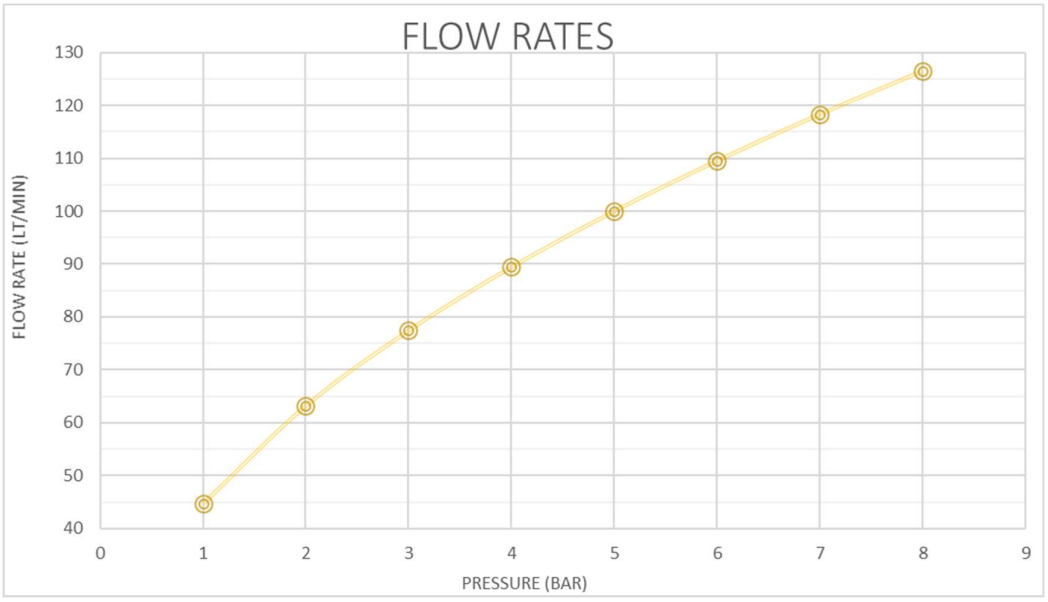
FLOW RATES
FLOW RATE (LT/MIN)
130
120
110
100
90
80
70
60
50
40
0
1
2
3
4
5
6
7
8
9
PRESSURE (BAR)

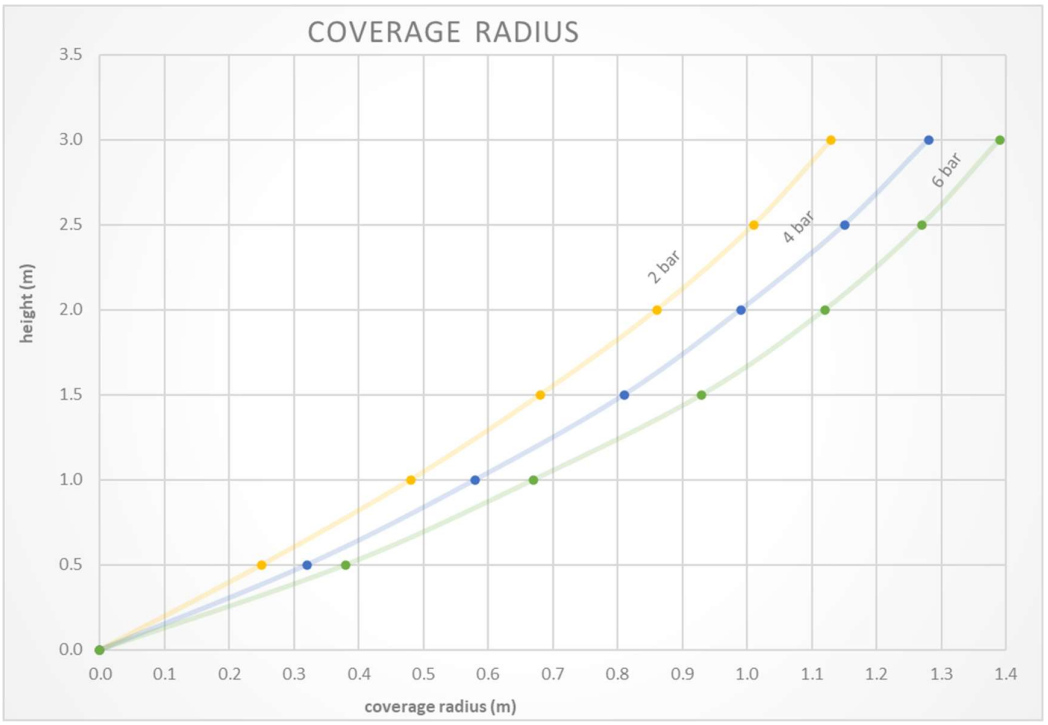
COVERAGE RADIUS
height (m)
3.5
3.0
2.5
2.0
1.5
1.0
0.5
0.0
0.0
0.1
0.2
0.3
0.4
0.5
0.6
0.7
0.8
0.9
1.0
1.1
1.2
1.3
1.4
coverage radius (m)
2 bar
4 bar
6 bar

LOW/MEDIUM EXPANSION FOAM NOZZLE SERIES SX-121 G

Expansion ratio 1:20 approx.

TECHNICAL DATA	
Inlet	threaded diam 3/4" or 1" GAS F
Working pressure	5.0 Bar
Flow range	From 50 to 100 Lt / min.
Expansion ratio	1:20 approximative
MATERIALS	
Body and internal net	stainless steel AISI 304 (B2), stainless steel AISI 316 (B3)
FINISH	
Brushed surface	

REFERENCE	FLOW RATE Lt / Min @ bar)				EXPANSION RATIO	WEIGHT (kg)
	1	2	3	5		
SX-121 G050	22	31	38	50	Approximative 1:20	0,75
SX-121 G060	27	38	46	60		
SX-121 G075	34	50	62	75		
SX-121 G100	44	62	76	100		

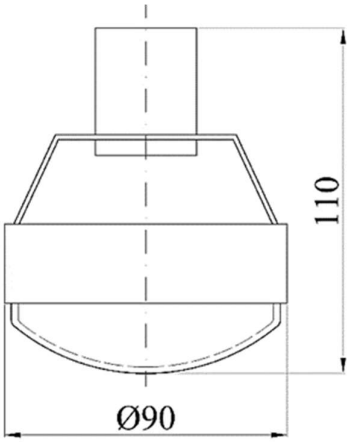

The expansion ratios shown in the table refer to a pressure of 2 bar and vary according to the mesh width of the net and the type of foaming concentrate used.

Models with different flow rates on request.

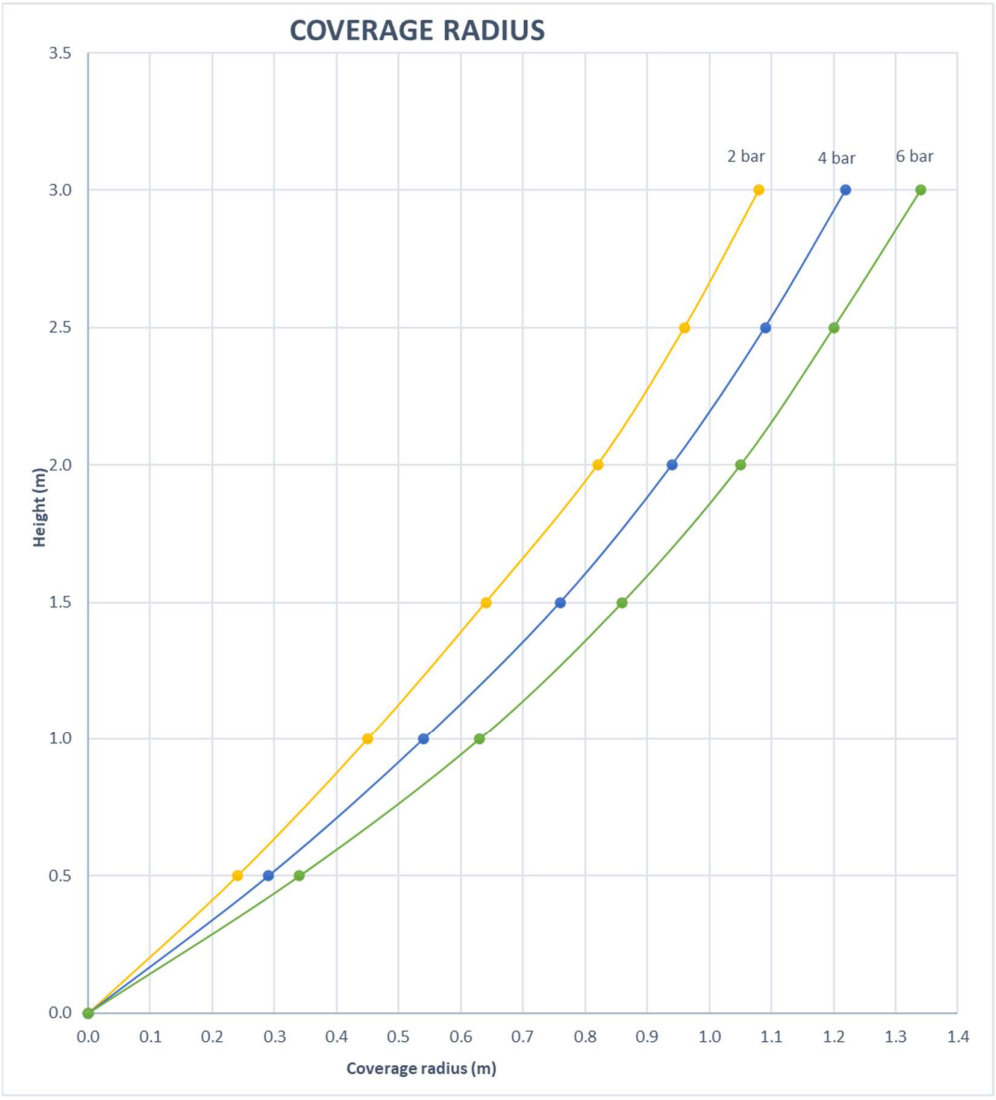

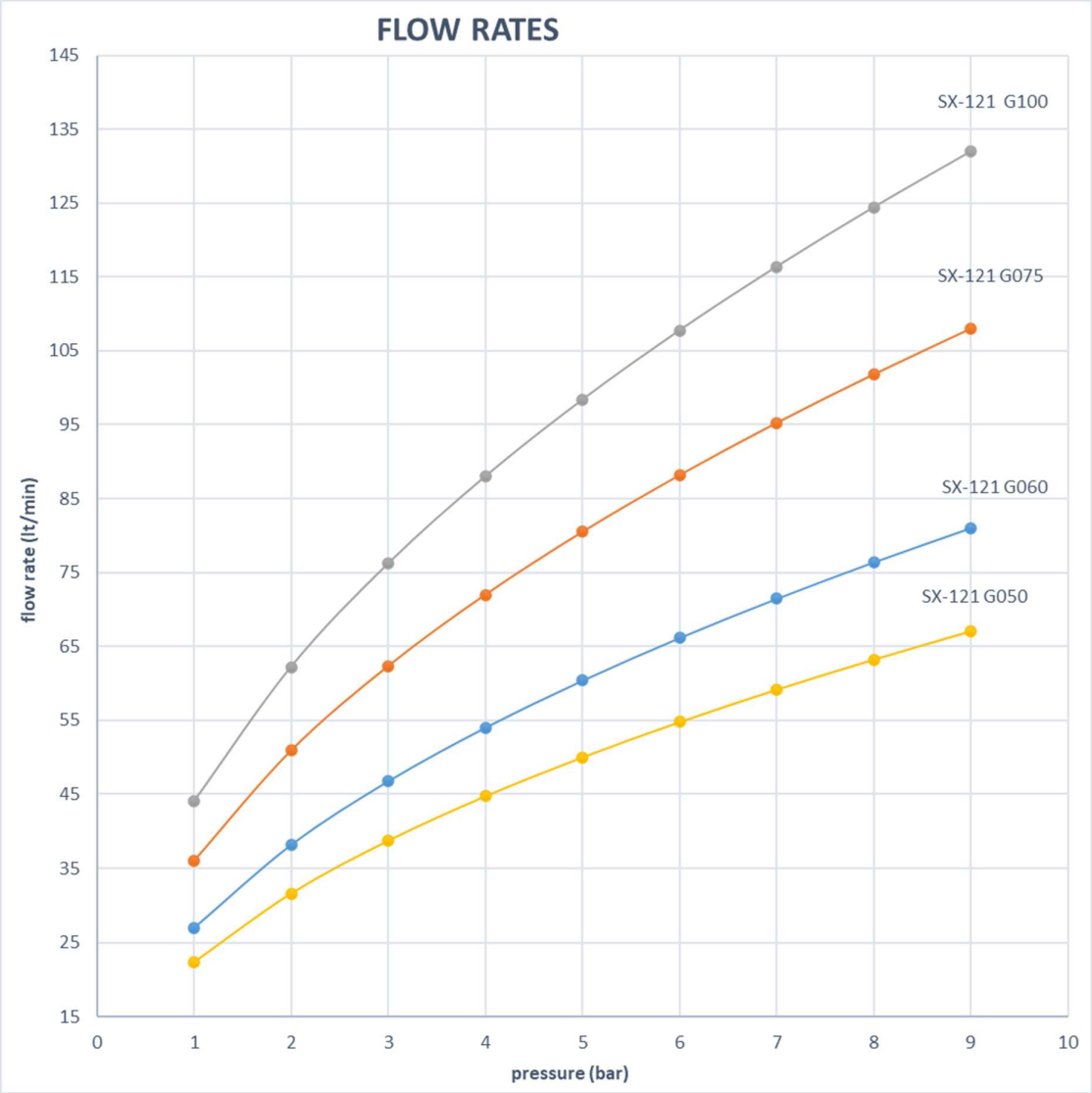
FLOW RATES
145
135
125
115
105
95
85
75
65
55
45
35
25
15
flow rate (lt/min)
0
1
2
3
4
5
6
7
8
9
10
pressure (bar)
SX-121 G100
SX-121 G075
SX-121 G060
SX-121 G050

MEDIUM EXPANSION FOAM NOZZLE SX-122 C

Expansion ratio : 1:70 approx.

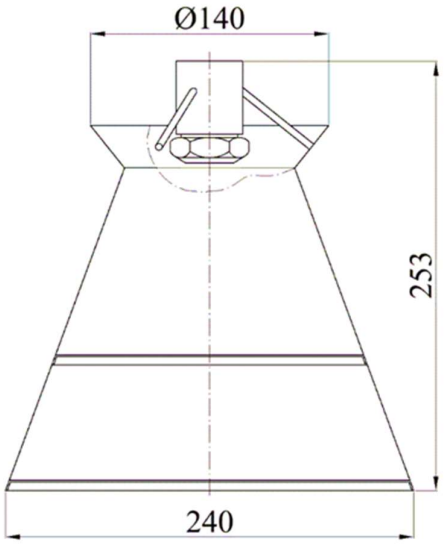

TECHNICAL DATA

Inlet	1" threated GAS F
Mixture flow rate	80 Lt / min @ 5 bar
Expansion ratio	1: 70 approx.
Pressure range	from 3 to 8 bar
MATERIALS	
Body and inlet	carbon steel (A1), stainless steel AISI 304 (B2), stainless steel AISI 316 (B3)
Nozzle	AISI 304 (B2)
Flange	Carbon steel - AISI 304
FINISH	
Carbon steel version: painting, colour red RAL 3000 Stainless steel : Brushed surface finish	

REFERENCE	FLOW RATE MIX (Lt / Min)	PRESSURE (bar)	EXPANSION RATE	WEIGHT (kg)
SX-122 C	80	5,0	1:70	1,1

WATER / LOW EXPANSION FOAM NOZZLE SERIES SX-123 A

SX-123 A firefighting nozzle is a low expansion foam nozzle that makes foam clashing a jet of water and foaming agent mix against a flow breaker.
Such impact generated an air-mix emulsion which is deflected and sprayed through a deflector.

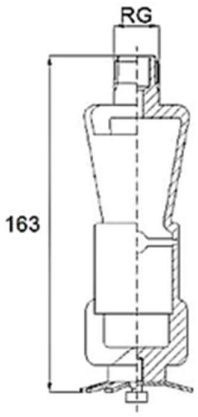

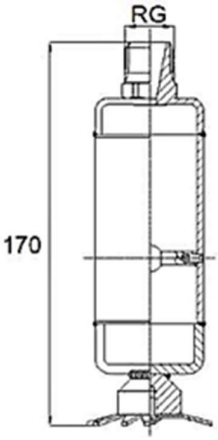

BRASS AISI 316L

TECHNICAL DATA	
Inlet	threated GAS 1/2" or 3/4"
Coupling	male BSPT, male NPT
Expansion ratio	1: 7
MATERIALS	
Stainless steel AISI 316L or Brass	

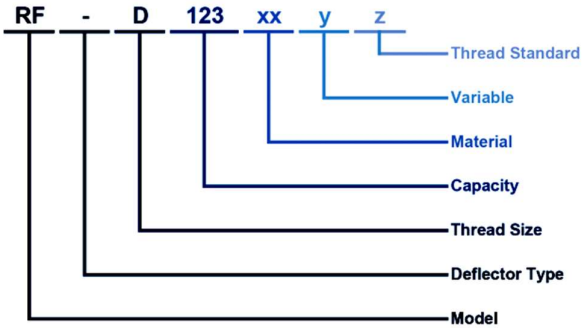

G = Parallel BSPP		N = Tapered NPT
B = Tapered BSPT		M = Female Tapered NPT
S = Without Filter		F = With Filter
T4 = Brass Delta D		B31 = AISI 316L s.s.
T8 = Galvanic Ni-plating Brass		T81 = Chemical Ni-plating Brass
See table		
D = 1/2"		E = 3/4"
C = Downright Special	D = Downright Standard	U = Upright
RF Series		

Code	RG	Flow rate (lpm) at different pressure values (bar)					
	inch	1,0	3,0	5,0	6,0	7,0	10
RF- D013 xx y z	1/2"	13,0	23,2	30,0	32,8	35,5	42,4
RF- D020 xx y z		20,0	34,6	44,7	49,0	52,9	63,2
RF- D022 xx y z		22,0	38,7	45,0	54,7	59,1	70,7
RF- D023 xx y z		23,0	39,0	50,4	55,1	59,6	71,2
RF- D027 xx y z		27,0	46,5	60,0	65,8	71,0	84,9
RF- D036 xx y z		36,8	63,7	82,3	90,1	97,4	116
RF- D040 xx y z		40,0	69,3	89,5	98,0	106	127
RF- D041 xx y z		41,2	72,2	92,6	102	110	132
RF- D043 xx y z		43,0	74,4	96,0	105	114	136
RF- D046 xx y z		46,1	80,0	103	113	122	146
RF- D053 xx y z		53,7	93,0	120	132	142	169
RF- D066 xx y z		66,0	114	147	161	174	208
RF- D080 xx y z		80,2	139	180	197	212	254
RF- E022 xx y z	3/4"	22,0	38,7	45,0	54,7	59,1	70,7
RF- E023 xx y z		23,0	39,0	50,4	55,1	59,6	71,2
RF- E024 xx y z		24,0	41,5	53,6	58,7	63,4	75,8
RF- E039 xx y z		30,0	52,0	67,1	73,5	79,4	95,0
RF- E036 xx y z		36,0	62,3	80,5	88,2	95,3	114
RF- E040 xx y z		40,0	69,0	89,5	98,0	106	127
RF- E041 xx y z		41,2	72,2	92,6	102	110	132
RF- E045 xx y z		45,0	78,0	101	110	119	142
RF- E054 xx y z		54,0	93,5	121	132	143	171
RF- E067 xx y z		67,0	116	150	164	177	212
RF- E080 xx y z		80,2	139	180	197	212	254
RF- E095 xx y z		95,0	165	212	233	251	300
RF- E102 xx y z		102	177	228	250	270	323

LOW CAPACITY BELL TYPE WATER NOZZLE SERIE SX-124 M

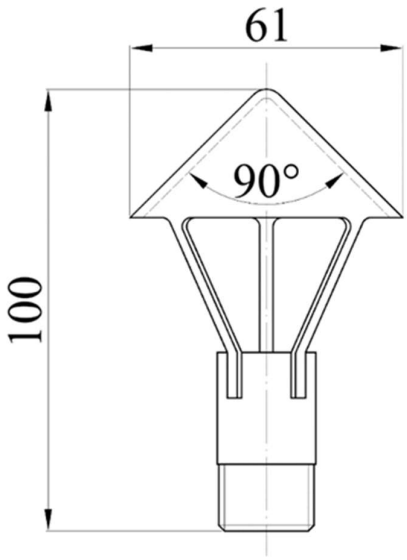

TECHNICAL DATA	
Inlet	½'' NPT or GAS male thread
Spray angle	90° approx.
Flow rate	from 50 to 120 lt/min @ 5bar
MATERIALS	
Body and diffuser	stainless steel AISI 304 (B2), stainless steel AISI 316 (B3)

REFERENCE	*Flow rate* (Lt/min@5 bar)		A (mm)	B (mm)	C	ß	*Weight* (kg)
	MIN	MAX					
SX-125 M001	200	400	190	165	1"1/2 – DN40	130°	3,5
SX-125 M002	400	650	235	210	2" – DN50	130°	5,5
SX-125 M003	800	1500	235	225	3" – DN80	130°	7,5
SX-125 M004	1500	3200	390	285	4" – DN100	145°	14,0
SX-125 M006	3200	5500	390	335	6" – DN150	145°	20,0

BELL TYPE WATER NOZZLE SERIE SX-125 M

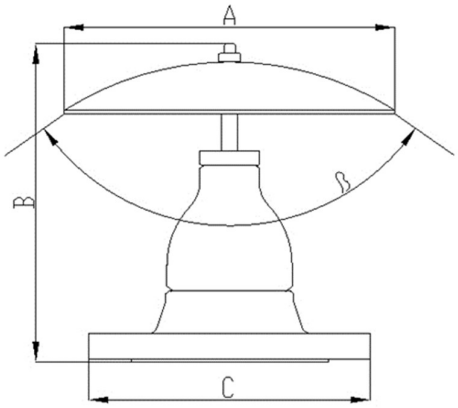

TECHNICAL DATA	
Inlet flange	ANSI 150 RF or UNI - DIN
MATERIALS	
Body, flange	Carbon steel (A1), s.s. AISI 304 (B2), s.s. AISI 316 (B3)
Deflector	s.s. AISI 304 (B2), s.s. AISI 316 (B3)
FINISH	
Carbon steel parts	Painting colour RAL 3000
Stainlees steel parts	Satin finish

REFERENCE	*Flow rate* (Lt/min@5 bar)		A (mm)	B (mm)	C	ß	*Weight* (kg)
	MIN	MAX					
SX-125 M001	200	400	190	165	1”1/2 – DN40	130°	3,5
SX-125 M002	400	650	235	210	2” – DN50	130°	5,5
SX-125 M003	800	1500	235	225	3” – DN80	130°	7,5
SX-125 M004	1500	3200	390	285	4” – DN100	145°	14,0
SX-125 M006	3200	5500	390	335	6” – DN150	145°	20,0

WATER CURTAIN NOZZLE SX-126

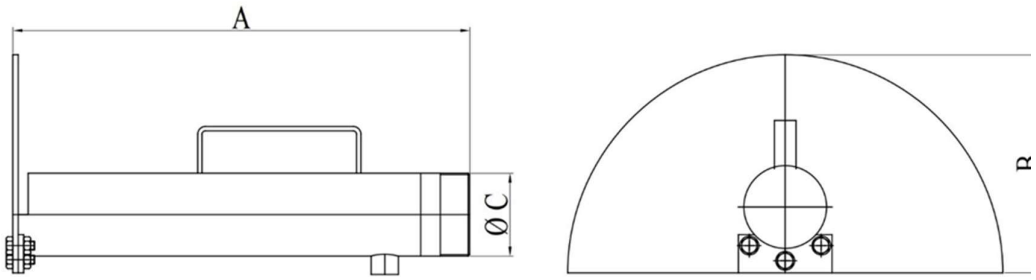

TECHNICAL DATA	
Standard version	Fixed installation
Input	Threaded, grooved, UNI-BS jointed
Working pressure	From 5 bar
Models with different flow rates on request	
MATERIALS	
Body, flanges and diffuser:	s.s. AISI 304 (B2), s.s. AISI 316 (B3)
FINISHING	
Brushed surface finish	
OPTIONALS	
Portable version with carrying handles and support foot	

REFERENCE		A (mm)	B (mm)	C	WEIGHT Kg
Standard	SX-126 K150	160	300	1” 1/2	3,8
On request	SX-126 K200	160	300	2”	4,5
	SX-126 K250	200	420	2” 1/2	6,0

PRESSURE (bar)	FLOW RATE Lt/Min	L (mt)	H (mt)
1	288	15	5,0
3	500	18	5,5
5	650	21	6,5
7	750	23	7,5

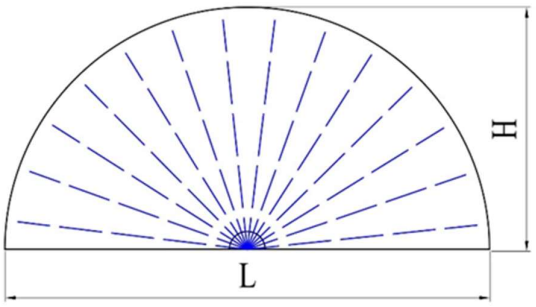

CARBON STEEL HYDRANT WITH MONITOR SERIES SX-140

Suitable for all kinds of monitors 3”, 4”, 6”

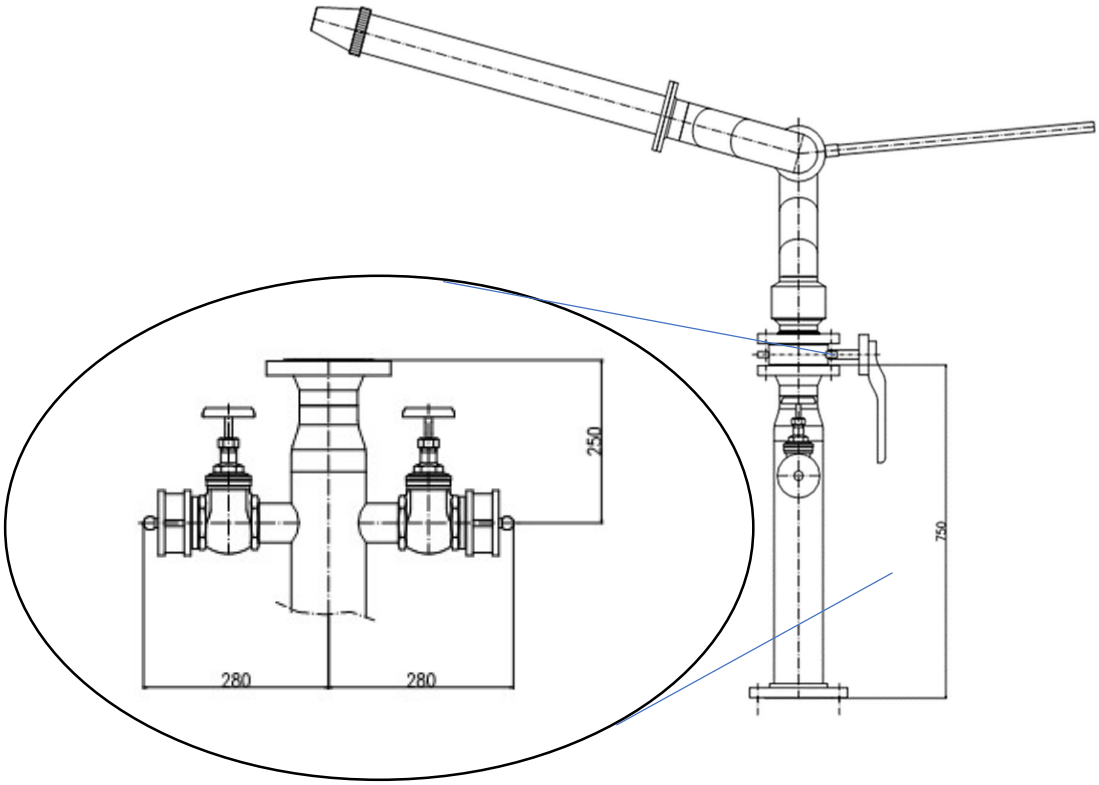

TECHNICAL DATA	
Inlet flange :	ANSI 150 RF or UNI - DN
Available size :	3’’, 4’’, 6’’
Number and size of outlet	On request
Coupling codes :	UNI and al international standard
MATERIALS	
Body :	Carbon steel (A1), inox AISI 304 (B2), inox AISI 316 (B3)
Flange :	Carbon steel (A1), inox AISI 304 (B2), inox AISI 316 (B3)
Gate valves and coupling :	Brass (T1), Bronze (T5)
Monitor base butterfly valve :	Cast iron (G1)
FINISH	
Carbon steel version	Painting- Colour red RAL 3000
Stainless steel version	Brushed surface finish

SELF-STANDING HOSE REEL SX-150

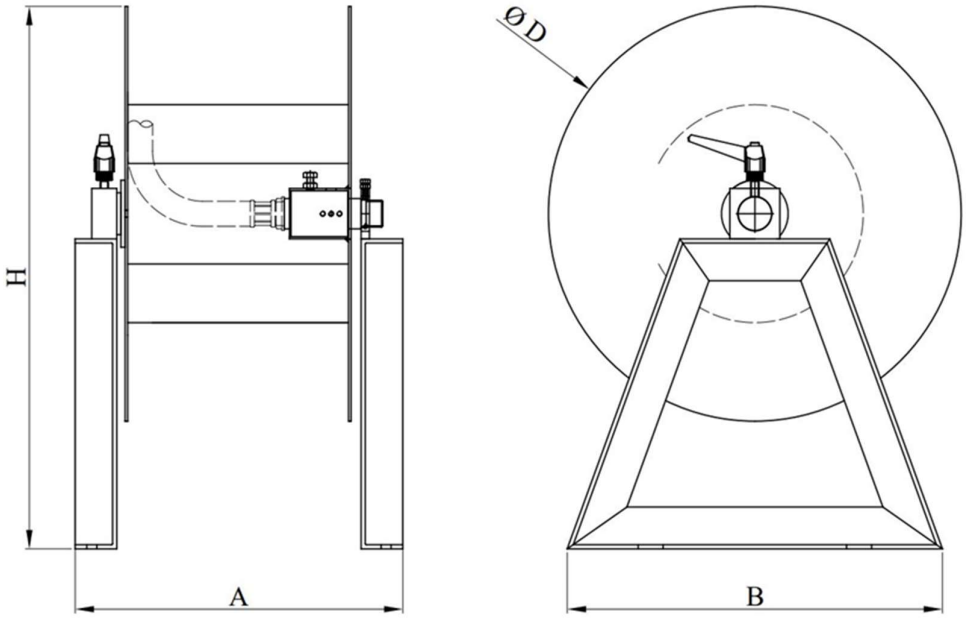

TECHNICAL DATA	
Available hose sizes	1'' or ¾''
Hose length	Standard 20 mt. Other length on request
Coupling codes	UNI and other international standard
Rotating joints on double balls track with greaser	
MATERIALS	
Body	Carbon steel (A1), Inox AISI 304 (B2), Inox AISI 316 (B3)
Rotating joint and couplings	Brass (T1)
FINISH	
Painting, colour red RAL 3000	

REFERENCE	INLET THREATED	D HOSE SIZE	A (mm)	B (mm)	D (mm)	H (mm)	WEIGHT
SX-150 1	1"	1"	393	450	495	648	35,0 Kg.
SX-150 3/4	3/4"	3/4"					

MONITOR POLES SX-160

Pole height: quote “H” customized
Rest intermediate platforms for higher elevations.
Available with fixed or turning platform.
Available with or without cooling circuit.
Suitable for all kind of monitors.

TECHNICAL DATA

Inlet	Flanged 3’’, 4’’ , 6’’
Inlet flange	ANSI 150 RF or UNI-DN
Pole height	H = customized
MATERIALS	
Body	Carbon steel (A1)
Flange	
FINISH	
Carbon steel painting, colour red RAL 3000	

REFERENCE	*Flow rate* (lt/min)	*Pole size*
SX-160 3	100 - 3000	3” DN80
SX-160 4	3100 – 6000	4” DN100
SX-160 6	6100 – 9000	6” DN150

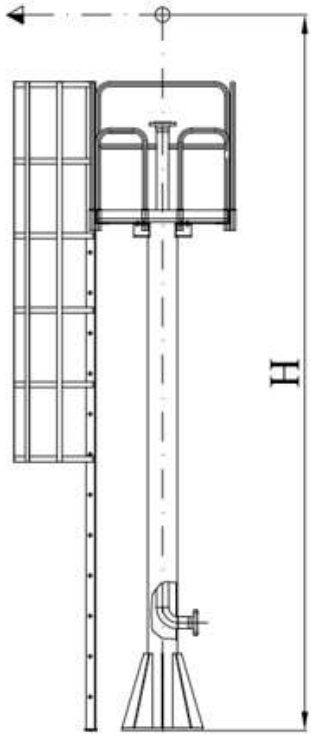

Fix tower poles

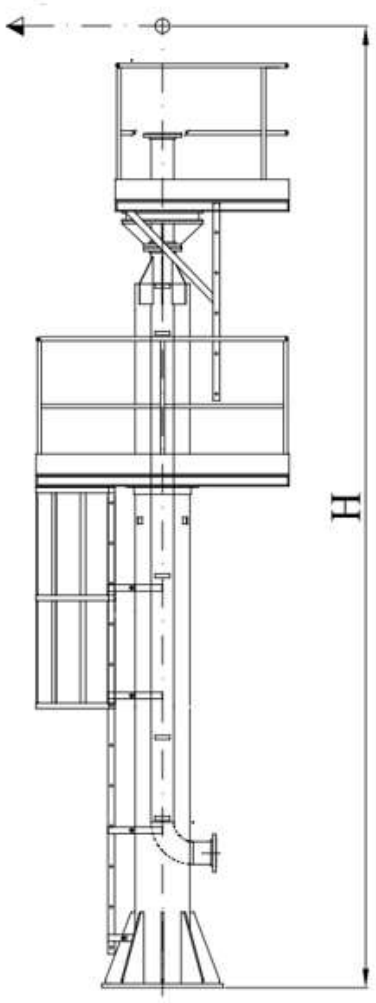

Rotate Tower poles

MONITOR TRAILER WITH FOAM TANK SX-170

Connections: UNI45 o UNI70 F turning, other connections available upon request
Single axle with pneumatic wheels for models up to 1000 lt capacity, double axle for higher capacities. Supplied with stabilizers and towing eye
Max speed 35 km/h

MATERIALS	
Frame	Carbon steel (A1)
Tank	s.s AISI 304 (B2)
FINISH	
Carbon steel painting, colour red RAL 3000	

Installable accessories and options

Monitors: manual, single and double handwheel, self-oscillating and lowered models
Terminals: self-suction lances and nozzles
Front wheel stabilizer
Manual parking brake
Spear support

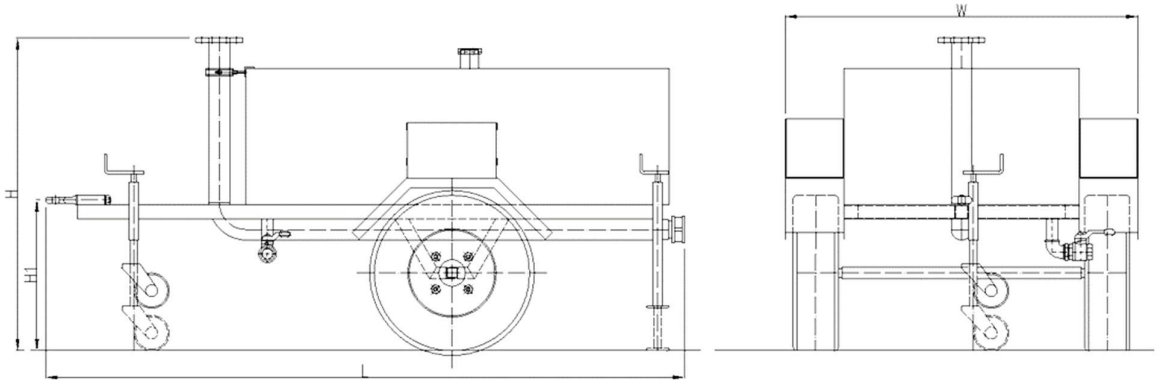

REFERENCE	Tank capacity (ltr)	L (mm)	W (mm)	H (mm)	H1 (mm)	D Manifold	Flow rate (ltr /min)	Weight (kg)
SX-170 020A	200	2240	1250	1080	620	3" - 4"	100 – 3000	250
SX-170 050A	500	2400	1500	1100	640	3" - 4"	100 – 3000	350
SX-140 060A	600	2400	1500	1100	640	3" - 4"	100 – 3000	360
SX-140 100A	1000	2720	1500	1330	640	3" - 4"	100 – 3000	400
SX-140 100H	1000	2720	1500	1330	640	4" - 6"	3100 – 6000	420
SX-140 200H	2000	2920	1800	1550	640	4" - 6"	3100 – 6000	680

MONITOR TRAILER SX-171 S - SH

Front wheel stabilizer
Manual parking brake
Spear support
Installable monitors: manual, single and double handwheel, self-oscillating and lowered models
Dispensing terminals: nozzles and water, foam and self-suction nozzles
Max speed 35 km/h

MATERIALS	
Frame	Carbon steel (A1)
FINISH	
Carbon steel painting, colour red RAL 3000	

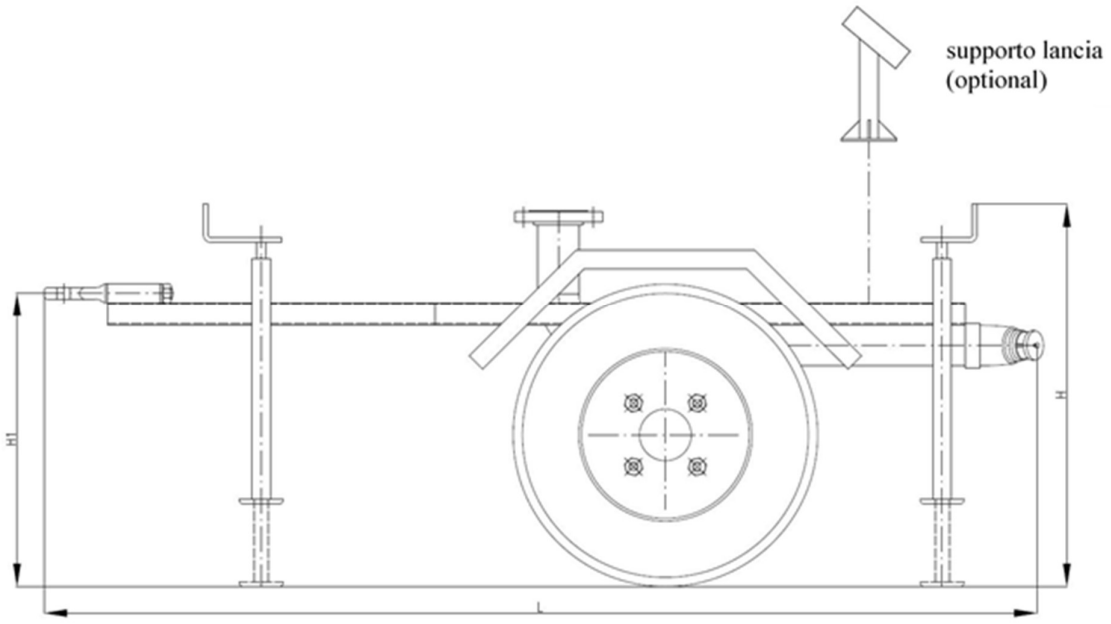

REFERERNCE	FLOW RATE (ltr/min)	MANIFOLD	L (mm)	LG (mm)	H (mm)	H1 (mm)	WEIGHT Kg
SX-171 S	100 – 3000	3" - 4"	2160	1520	850	640	300
SX-171 SH	3100 – 6000	4" - 6"	2160	1520	850	640	350

MONITOR TRAILER SX-172

Pneumatic wheels, towing eye
Max speed: 10 km/h
Installable monitors: manual single and double handwheel and lowered models
Dispensing terminals: nozzles and water, foam and self-suction nozzles

TECHNICAL DATA	
Connections	UNI45 o UNI 70 F turning
	Other connections available upon request
Maximum tilt angle	60°
MATERIALS	
Frame	Carbon steel (A1)
FINISH	
Carbon steel painting, colour red RAL 3000	

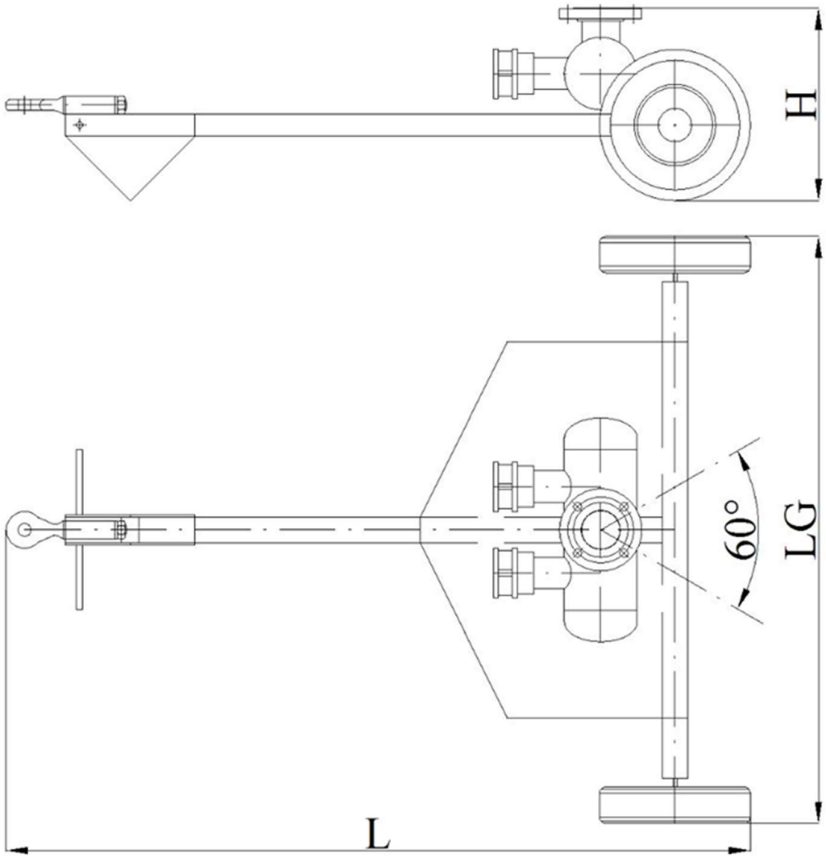

REFERENCE	Flow rate (Ltr/min)	Manifold diameter	L (mm)	LG (mm)	H (mm)	WEIGHT (kg)
SX-172	100 – 2000	3”	1750	1360	450	150

MANUAL TRAILER WITH FOAM DRUM SX-221

Suitable for manual towing
Mixer threated UNI 45 or UNI 70
Foam mixing ratio: from 1% to 6%
Available flow rates: from 100 to 400 lt/min
Complete with foam branch pipe
Supplied with 2 fire hoses UNI45 or UNI70
Trailer with pedal for manoeuvre drum lifting

The foam drum is not included in the forniture

MATERIALS	
Body	Carbon steel (A1)
Branchpipe	Inox AISI 304 (B2)
Mixer	Aluminium alloy (V1)
FINISH	
Carbon steel painting, colour red RAL 3000	

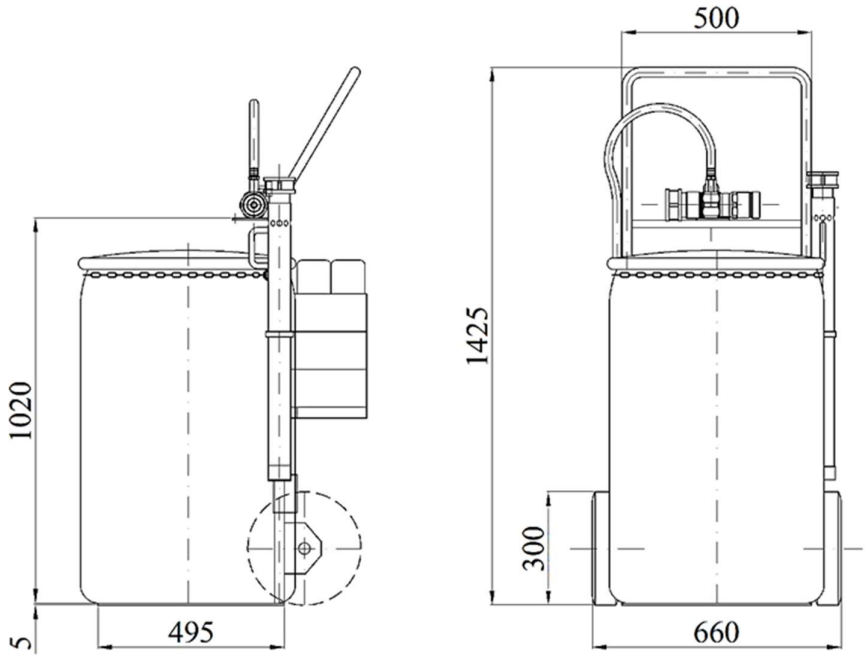

REFERENCE	A (mm)	B (mm)	C (mm)	D (mm)	EMPTY WEIGHT (kg)
SX-221 1	1425	1020	660	476	17,0
SX-221 2					

MONITOR TRAILER WITH FOAM STEAM SERIES SX-175

Adjustable telescopic stabilizer
Single axle with pneumatic wheels, double axle for higher capacities.
Supplied with stabilizers and towing eye
Max speed 10 km/h

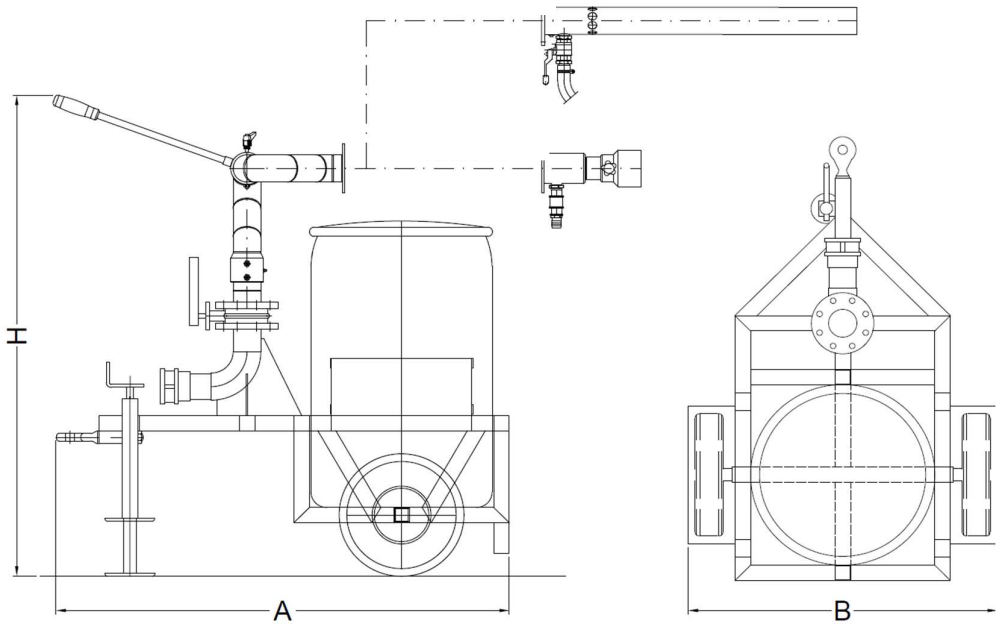

TECHNICAL DATA	
Inlet until 6” with couplings	
Couplings codes : UNI and international standard	
Suitable for all monitors	
MATERIAL	
Trailer and frame	Carbon steel (A1)
FINISH	
Carbon steel painting, colour red RAL 3000	

REFERENCE	*FOAM STEAM CAPACITY*	*A mm*	*B mm*	*H mm*	*EMPTY WEIGHT*
SX-175 A010	100 ltr.	1450	840	1570	295 Kg
SX-175 A020	200 ltr.	1450	990	1570	300 Kg

WHEELED FOAM UNIT SX-245

Tank capacity: 50 Lt
Tank construction code: I.S.P.E.S.L.
Working pressure min.: 2,0 bar
Mixing ratio: 1% - 3%
Flow rate: 70 - 300 Lt/min
Working time: 16 min. (mix 1%)
Nr. 1 or 2 hoses UNI45 x 20 mt
Couplings codes: UNI and all international std

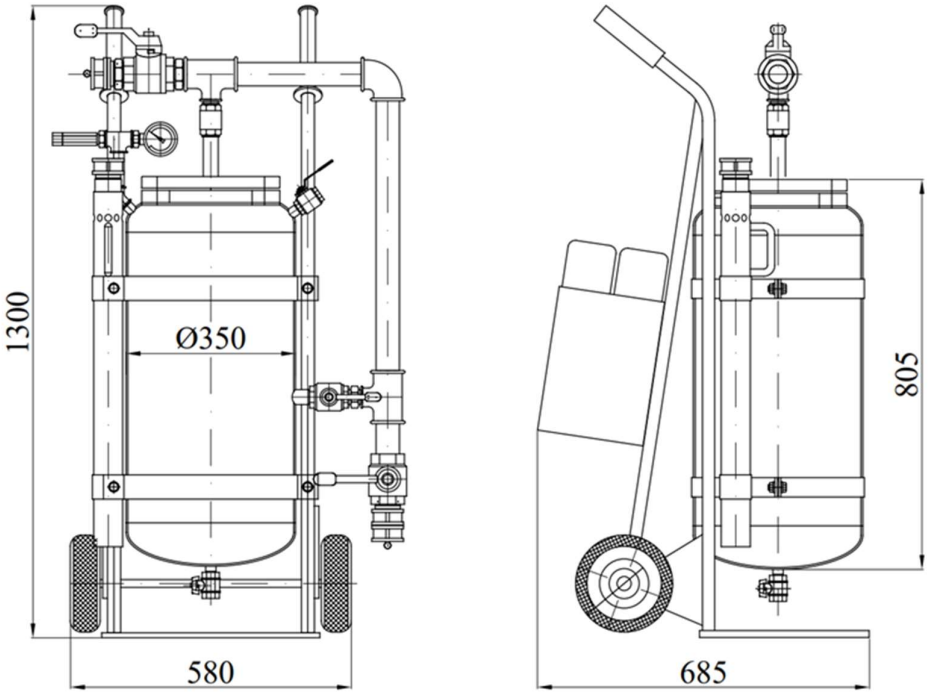

MATERIALS	
Body	Carbon steel (A1), s.s on request
Tank	Carbon steel (a !0, s.s on request
Foam branchpipe	s.s. AISI 304 (B2)
Hose container	Carbon steel (A1)
Coupling	Brass (T 1)
FINISH	
Carbon steel painting, colour red RAL 3000	

VERTICAL LIQUID DISPLACEMENT FOAM PREMIXER SERIES SX-200 - A

Water inlet available with flow from right to left or from left to right.
Standard version with foaming agent outside the membrane, on request version with foaming agent inside the membrane.
Tanks can be supplied with other capacities in addition to the standard ones, on request.

TECHNICAL DATA	
Construction code	2014 / 68 / UE EX PED 97/23. ASME VIII Div.1 on request
Design pressure	12 Bar
Max working pressure	12 Bar
Test pressure	18 Bar
Design temperature	-10^0 $+50^0$C

The pre-mixer is suitable for use with:
- standard mixers MIX
- extended range mixers WR

MATERIALS	
Shell and head	P355 NH
Flange	ASTM a 105
Pipe	ASTM A 106 Gr.B
Water and foam ball valve	ASTM A 105 with ball in s.s. AISI 304
Vent and level valves	Brass (T1)
Pressure gauge	s.s AISI 304 glycerine filled
Water and foam nozzles	s.s. AISI 304 (B2)
Bladder	Hypalon
FINISH	
Carbon steel version: painting colour red RAL 3000	

REFERENCE	CAPACITY (ltr)	A (mm)	C (mm)	E (mm)	*EMPTY WEIGHT* (Kg)
SX-200 A003 A2	300	600	1815	420	250
SX-200 A004 A2	400	650	2030	440	300
SX-200 A006 A2	600	750	2176	650	570
SX-200 A010 A2	1000	950	2580	650	730
SX-200 A015 A2	1500	1000	2926	750	930
SX-200 A020 A2	2000	1050	3300	800	1360
SX-200 A025A2	2500	1200	3800	800	1530
SX-200 A030 A2	3000	1290	3430	860	1700
SX-200 A035 A2	3500	1400	3930	900	2080
SX-200 A040 A2	4000	1500	3530	950	2300
SX-200 A050 A2	5000	1600	3606	1050	2660
SX-200 A060 A2	6000	1800	3680	1150	3030
SX-200 A065 A2	6500	1800	3700	1150	3100
SX-200 A070 A2	7000	2000	3800	1200	3300
SX-200 A075 A2	7500	2000	3920	1200	3400
SX-200 A080 A2	8000	2000	4008	1200	3700

Pre-mixer with standard mixer and foaming agent outside the membrane.

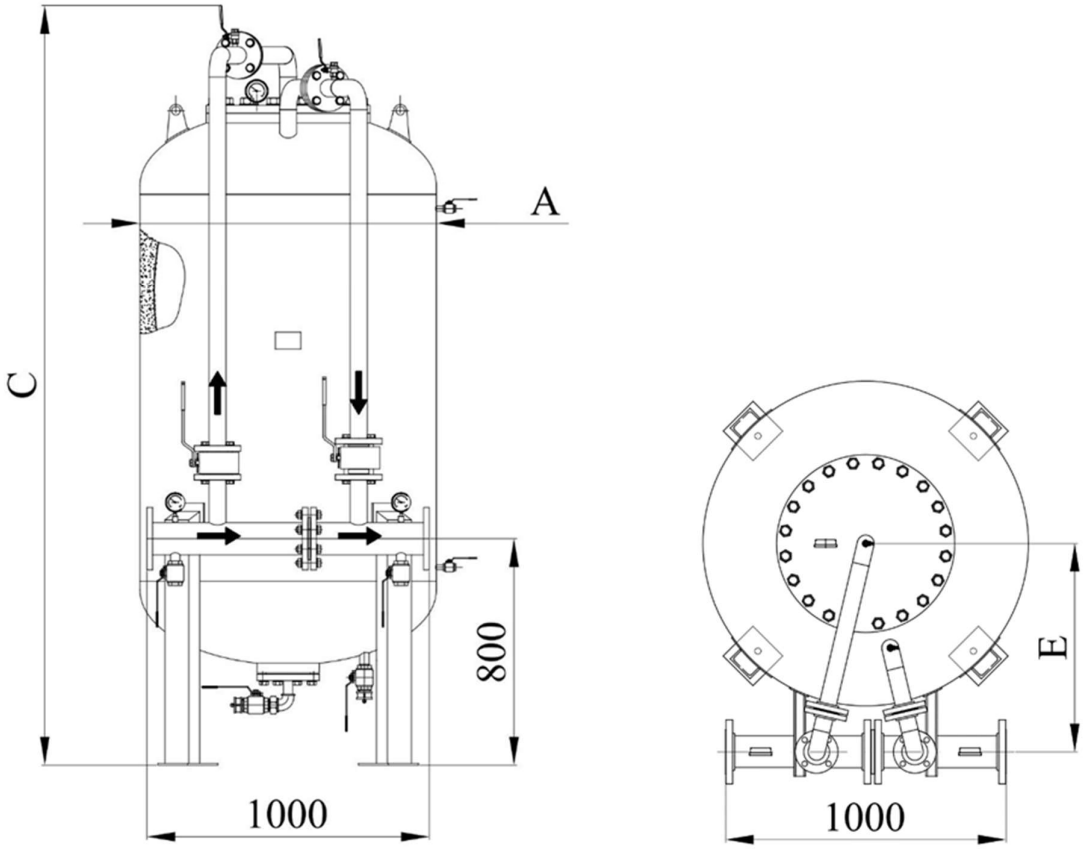

Identification codes to be specified during the offer phase (example).

Pre- mixer Tank	Type of foaming	
SX-200 A040 A2	I : Internal membrane	MIX : Standard
	E : external membrane	MIX-WR : extended range model

Functional pre-mixer scheme with standard mixer (illustrative version with standard mixer).

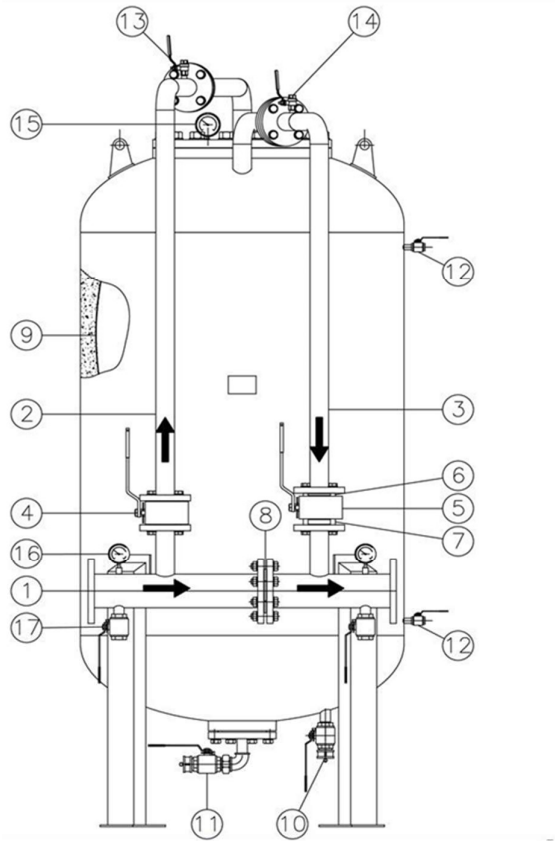

Foaming agent outside the membrane (standard)

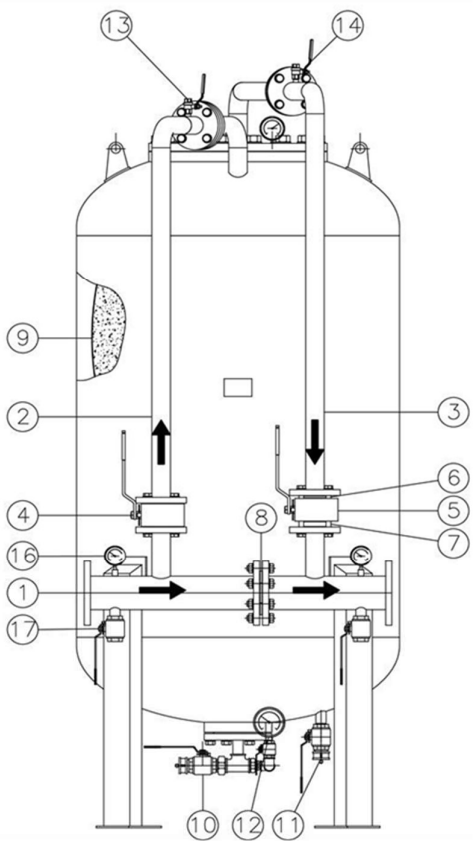

Foaming agent inside the membrane

1	Mixer
2	Water inlet line
3	Foaming exit line
4	Water inlet valve
5	Foaming outlet valve
6	Calibrated foaming nozzle
7	Non-return valve
8	Calibrated water nozzle
9	Water / foaming separation membrane
10	Foam loading and draining valve
11	Water drain valve
12	Level indicator (valve or pressure gauge)
13	Air vent valve
14	Air vent valve
15	Tank pressure gauge
16	Mixer line pressure gauges
17	Mixer drain valves

HORIZONTAL LIQUID DISPLACEMENT FOAM PREMIXER SERIES SX-215 C

Water inlet available with flow from right to left or from left to right.
Standard version with foaming agent outside the membrane, on request version with foaming agent inside the membrane.
Tanks can be supplied with other capacities in addition to the standard ones, on request.

TECHNICAL DATA	
Construction code	2014 / 68 / UE EX PED 97/23. ASME VIII Div.1 on request
Design pressure	12 Bar
Max working pressure	12 Bar
Test pressure	18 Bar
Design temperature	-10^0 $+50^0$C
Flange	UNI / DN o ANSI

The pre-mixer is suitable for use with:
- standard mixers MIX
- extended range mixers WR

MATERIALS	
Shell and head	P355 NH
Flange	ASTM a 105
Pipe	ASTM A 106 Gr.B
Water and foam ball valve	ASTM A 105 with ball in s.s. AISI 304
Vent and level valves	Brass (T1)
Pressure gauge	s.s AISI 304 glycerine filled
Water and foam nozzles	s.s. AISI 304 (B2)
Bladder	Hypalon
FINISH	
Carbon steel version: painting colour red RAL 3000	

REFERENCE	CAPACITY (ltr)	A (mm)	C (mm)	E (mm)	*EMPTY WEIGHT* (Kg)
SX-215 C010 A2	1000	900	1746	1000	730
SX-215 C015 A2	1500	1000	2426	1000	930
SX-215 C020 A2	2000	1050	2800	1035	1360
SX-215 C025 A2	2500	1200	3100	1035	1530
SX-215 C030 A2	3000	1250	2730	1125	1700
SX-215 C035 A2	3500	1400	3230	1125	2080
SX-215 C040 A2	4000	1500	3030	1225	2300
SX-215 C050 A2	5000	1600	3106	1300	2660
SX- 215 C060 A2	6000	1800	3181	1375	3030
SX-215 C065 A2	6500	1800	3300	1375	3100
SX-215 C080 A2	8000	2000	3308	1450	3700
SX- 215 C100 A2	10000	2000	3890	1450	3500

Pre-mixer with standard mixer and foaming agent outside the membrane.

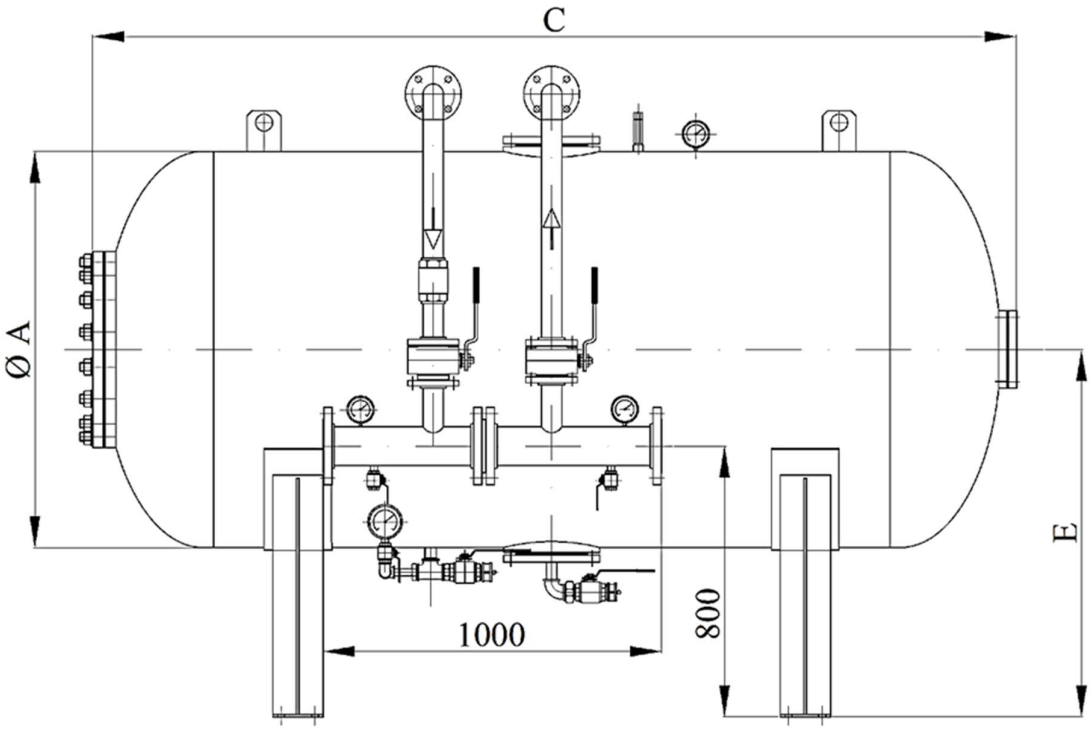

Identification codes to be specified during the offer phase (example).

Pre- mixer Tank	Type of foaming	
SX-215 C040 A2	I : Internal membrane	MIX : Standard
	E : external membrane	MIX-WR : extended range model

Functional pre-mixer scheme with standard mixer (illustrative version with standard mixer).

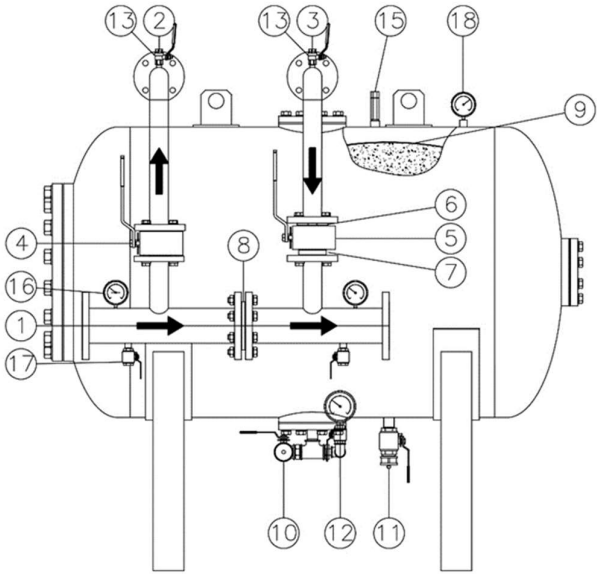

Foaming agent outside the membrane (standard)

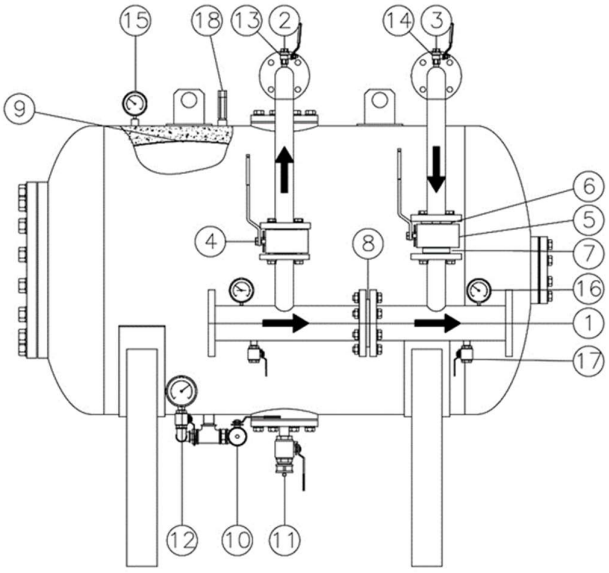

Foaming agent inside the membrane

1	Mixer
2	Water inlet line
3	Foaming exit line
4	Water inlet valve
5	Foaming outlet valve
6	Calibrated foaming nozzle
7	Non-return valve
8	Calibrated water nozzle
9	Water / foaming separation membrane
10	Foam loading and draining valve
11	Water drain valve
12	Level indicator (valve or pressure gauge)
13	Air vent valve
14	Air vent valve
15	Tank pressure gauge
16	Mixer line pressure gauges
17	Mixer drain valves

IN-LINE FOAM INJECTOR SX-216 F

Foam mixing ratio 1%, 3%, 6%
Foaming concentrate must be injected by means of a pump, with a pressure at least 2 bar greater than the pressure of the water line.
For the correct sizing of the product, the flow rate of the mixture at the outlet and the% of mixing must be supplied at the order stage.

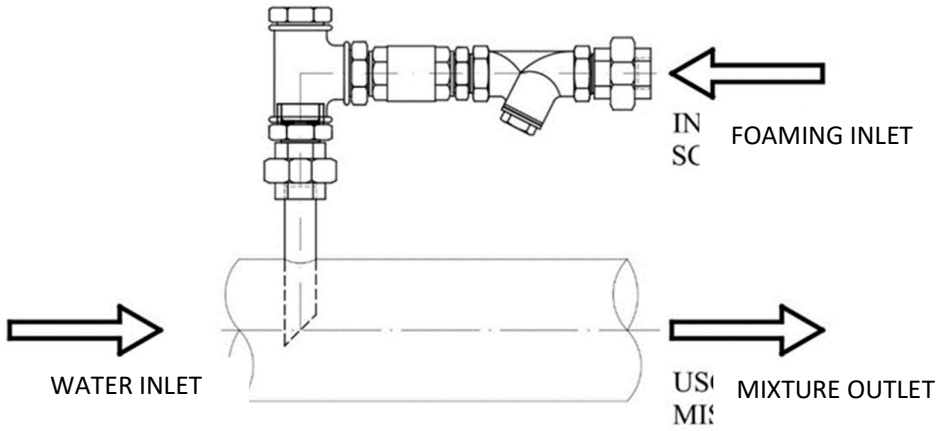

TECHNICAL DATA	
Foam mixing ratio	1%, 3%, 6%
MATERIALS	
Body :	Bronze (T5), Brass (T1), s.s AISI 304 (B2), s.s AISI 316 (B3)
Filter:	Bronze (T5), Brass (T1)Carbon steel (A1)
Nozzle :	s.s. AISI 304 (B2), s.s. AISI 316 (B3)
Check valve :	Bronze (T5), brass (T1)
Solder terminal :	
FINISH	
Standard painting colour red RAL 3000 Carbon steel construction on request. Painting on specific customer.	

REFERENCE	MIXTURE FLOW RATE (Lt / Min)	FOAMING INLET	INJECTION PIPE
SX-216 F 1	100 - 1700	1”	1”
SX-216 F 2	1800 - 3000	1”1/2	1”1/2
SX-216 F 3	3100 - 5000	2”	2”

IN-LINE FOAM MIXER SX-217 F313 / F323

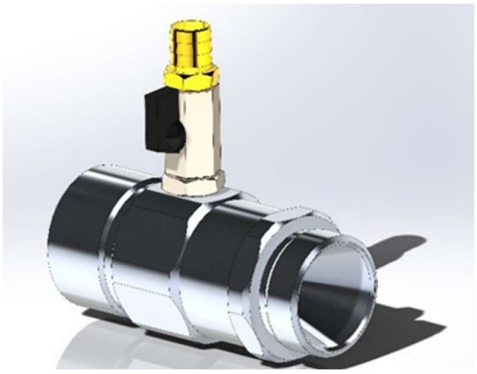

TECHNICAL DATA	
Inlet :	2'' GAS F with adapter UNI 45/70
Outlet :	2'' GAS M with adapter UNI 45/70 other adapter on request
Aspiration inlet :	1/2" Gas with partializing ball valve and hose holder. For a good performance, leave 8 diameters of straight pipe upstream and downstream of the mixer
MATERIALS	
Body :	Light alloy
Nozzle :	Light alloy
Adapter :	Brass (T1)
OPTIONAL	
Body and nozzle bronze (T5) and AISI 304 (B2) Models with different flow rates and pressures on request.	

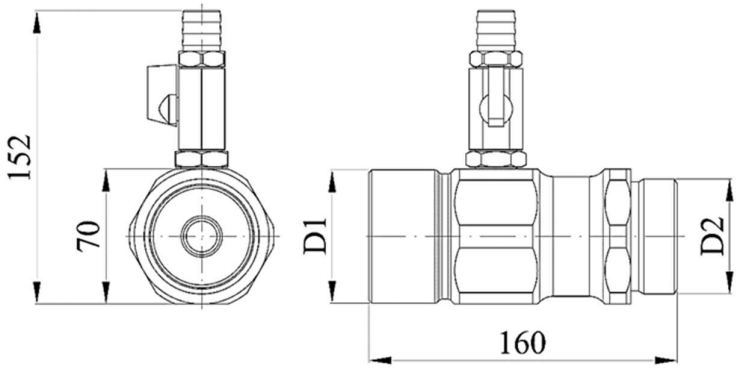

REFERENCE	FLOW RATE	OPERATING PRESSURE	MIXING	D1	D2	*WEIGHT*
SX-217 F313	100 Lt/min	7,0 Bar	3% or 6%	2" GAS F	2" GAS M	7,0 Kg.
SX-217 F323	200 Lt/Min					
SX-217 F343	400 Lt/Min					

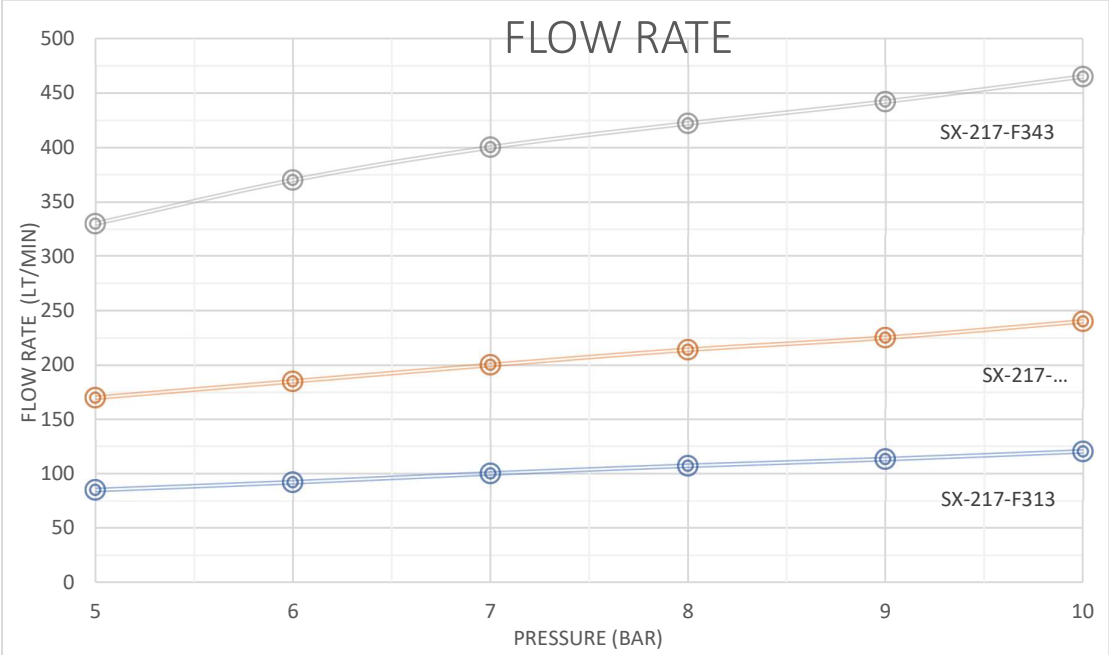
FLOW RATE
500
450
400
350
300
250
200
150
100
50
0
FLOW RATE (LT/MIN)
5
6
7
8
9
10
PRESSURE (BAR)
SX-217-F343
SX-217-...
SX-217-F313

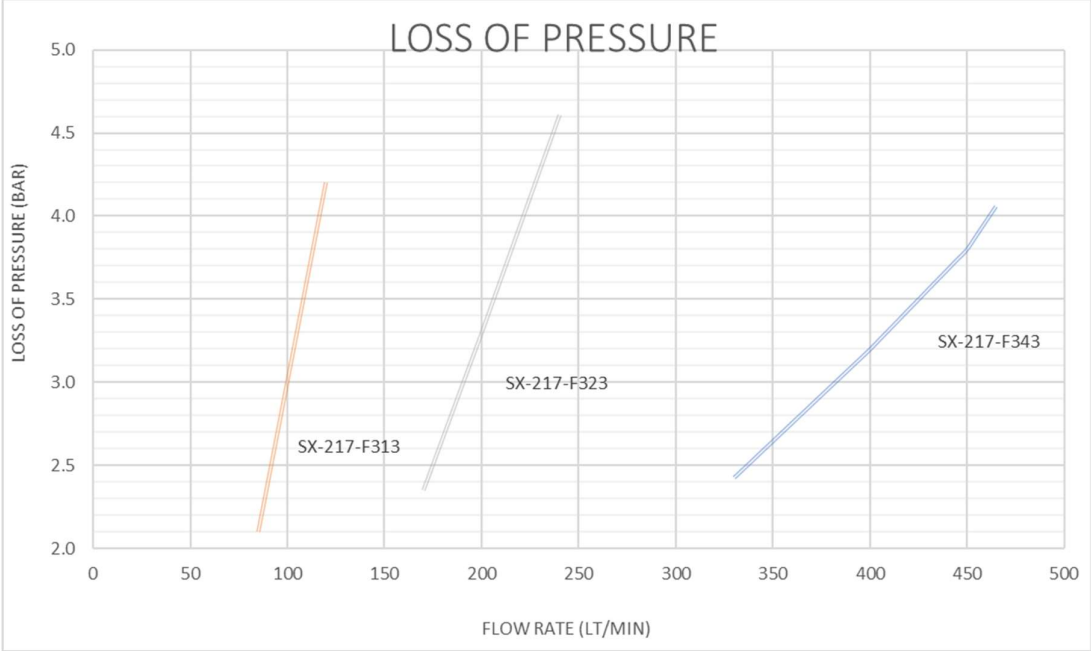
LOSS OF PRESSURE
5.0
4.5
4.0
3.5
3.0
2.5
2.0
LOSS OF PRESSURE (BAR)
0
50
100
150
200
250
300
350
400
450
500
FLOW RATE (LT/MIN)
SX-217-F313
SX-217-F323
SX-217-F343

IN-LINE FOAM MIXER SX-217.1 FF313 / FF323 FF343

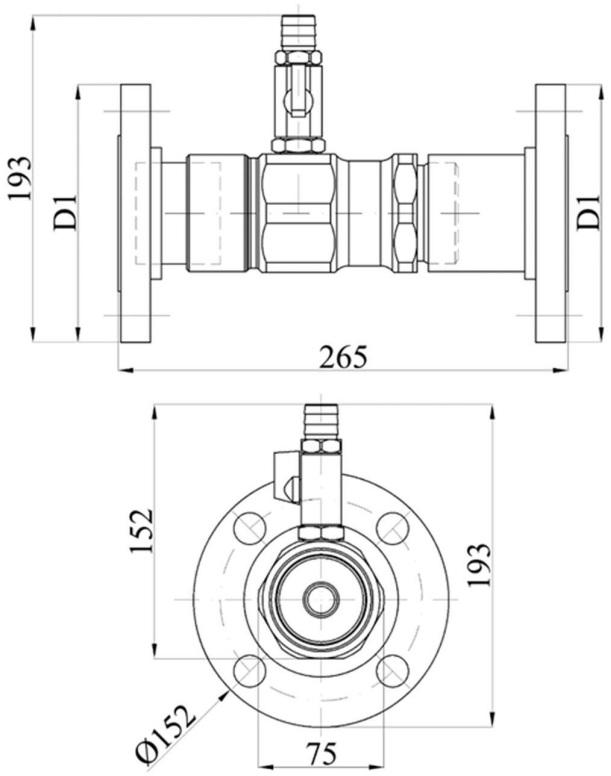

TECHNICAL DATA	
Inlet :	flange ANSI 150 RF 2”
Outlet :	flange ANSI 150 RF 2” other adapter on request
Aspiration inlet :	1/2” Gas with partializing ball valve and hose holder. For a good performance, leave 8 diameters of straight pipe upstream and downstream of the mixer
MATERIALS	
Body :	Light alloy
Nozzle :	Light alloy
Adapter :	Brass (T1)
OPTIONAL	
Body and nozzle bronze (T5) and AISI 304 (B2) Models with different flow rates and pressures on request.	

REFERENCE	FLOW RATE	OPERATING PRESSURE	MIXING	D1	*WEIGHT*
SX-217.1 FF313	100 Lt/min	7,0 Bar	3% or 6%	flange ANSI 150 RF 2	7,0 Kg.
SX-217.1 FF323	200 Lt/Min				
SX-217.1 FF343	400 Lt/Min				

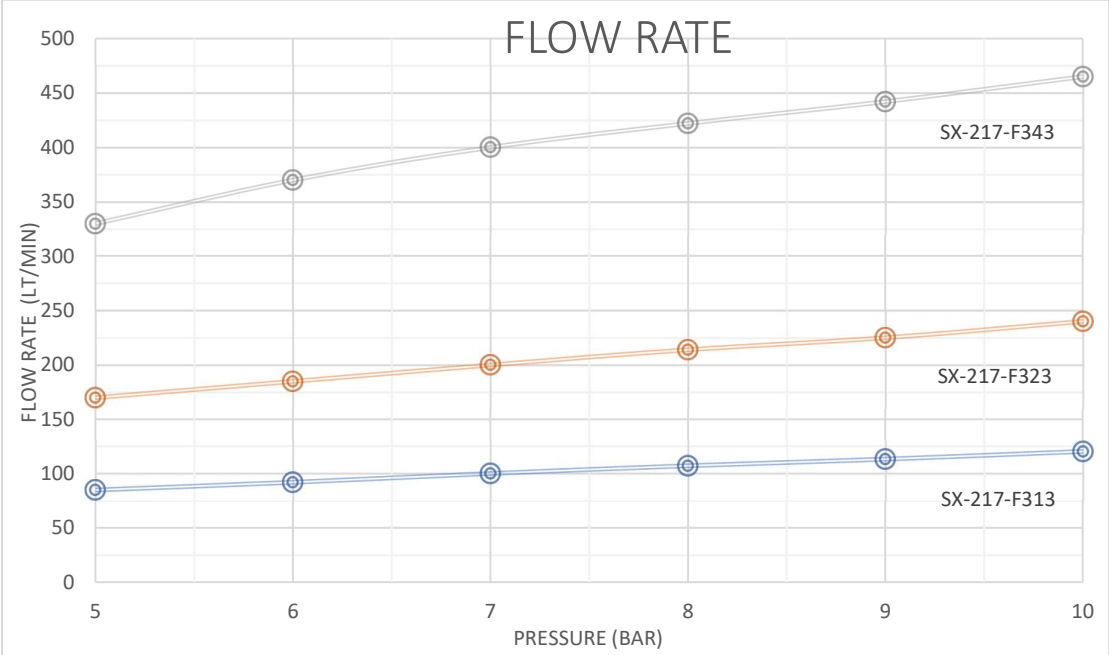
FLOW RATE
500
450
400
350
300
250
200
150
100
50
0
FLOW RATE (LT/MIN)
5
6
7
8
9
10
PRESSURE (BAR)
SX-217-F343
SX-217-F323
SX-217-F313

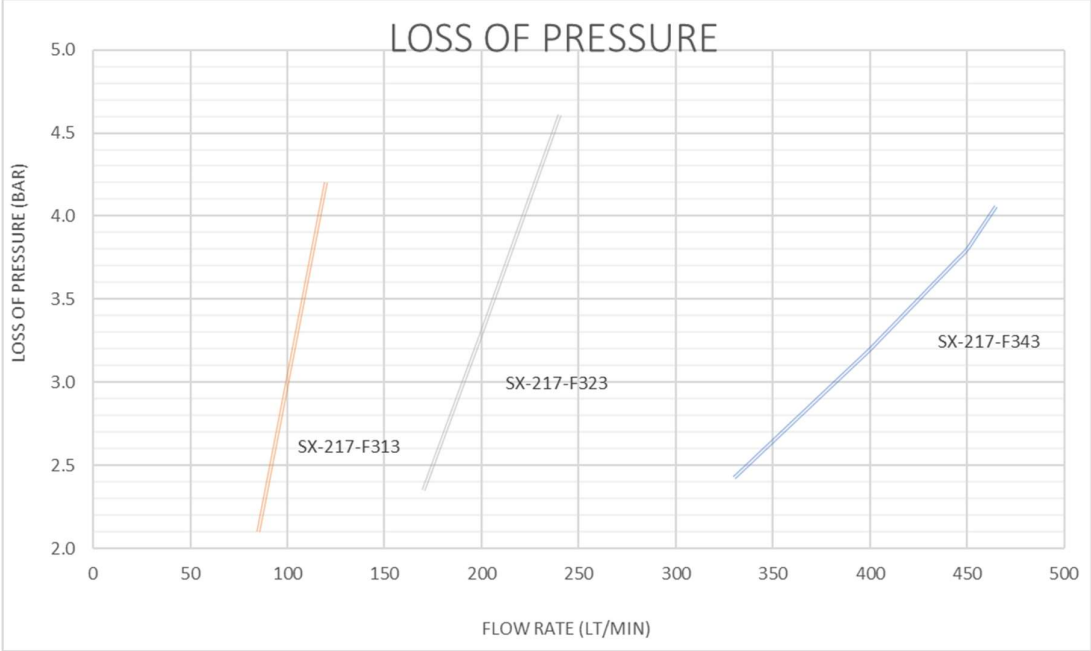
LOSS OF PRESSURE
5.0
4.5
4.0
3.5
3.0
2.5
2.0
LOSS OF PRESSURE (BAR)
0
50
100
150
200
250
300
350
400
450
500
FLOW RATE (LT/MIN)
SX-217-F313
SX-217-F323
SX-217-F343

COMPACT IN-LINE FOAM MIXER SX-219 C

Foam mixing ratio 0% to 6%

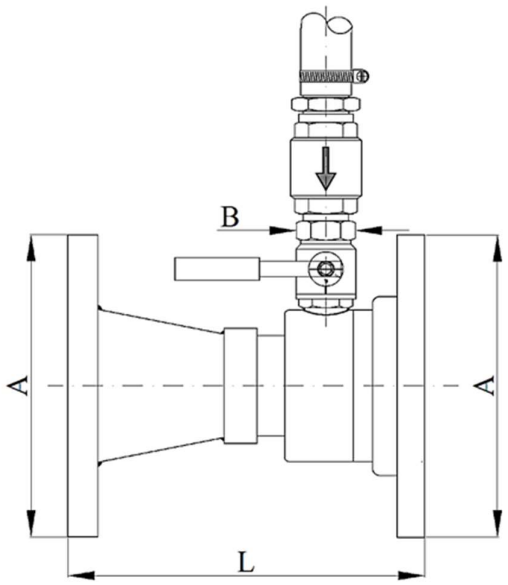

TECHNICAL DATA	
Flange :	ANSI 150 RF or UNI PN16
Foam mixing ratio	from 0% to 6%
	Rubber pick-up pipe 200 cm length
MATERIALS	
Body :	Carbon steel (A1), Aluminium (V1), s.s AISI 304 (B2), s.s AISI 316 (B3)
Nozzle :	brass (T1), Aluminium (V1)
FINISH	
Carbon steel version: painting colour red RAL 3000 Stainless steel version: brushed surface	

REFERENCE	*FLOW RATE* (Lt/Min @ 7 bar)	*PRESSURE LOSS* (bar)	A	B	L (mm)	*WEIGHT* (Kg)
SX-219 C3	500 – 900	39%	flange 3”	fil. 3/4” GAS F	260	6,0
SX-219 C4	1000 – 2500	35%	flange 4”	fil. 3/4” GAS F		10,0
SX-219 C6	2500 - 3500	35%	flange 6”	fil. 1” GAS F		13,0

TWIN AGENT UNIT ON TRAILER SX-230

Adjustable telescopic stabilizer
Single axle with pneumatic wheels, double axle for higher capacities.
Supplied with stabilizers and towing eye
Max speed 35 km/h

TECHNICAL DATA	
Aluminium coupled discharge nozzles	
Nitrogen 27 lt bottle	
Supplied with nr. 2 fire hoses UNI25 20 mt lenght	
MATERIAL	
Trailer	Carbon steel (A1)
Frame	Carbon steel (A1)
100 Kg powered tank	Carbon steel (A1)
100 Ltr. Foaming tank	s.s. AISI 316L (B3)
FINISH	
Carbon steel painting, colour red RAL 3000	

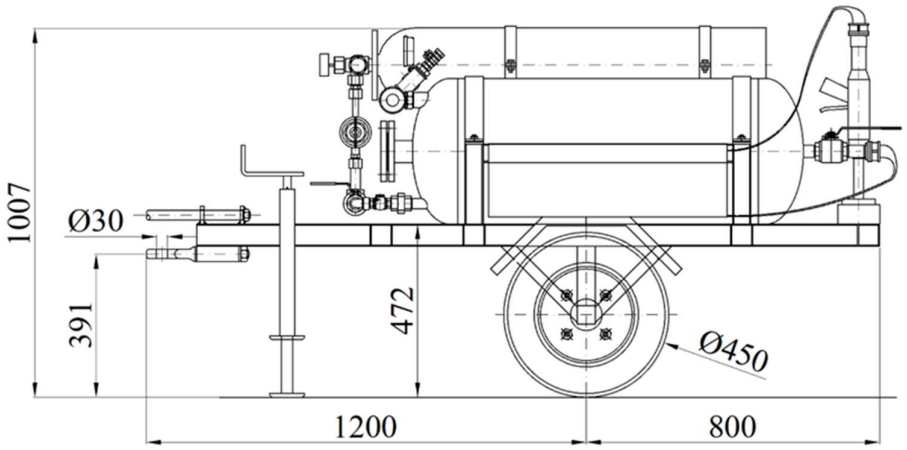

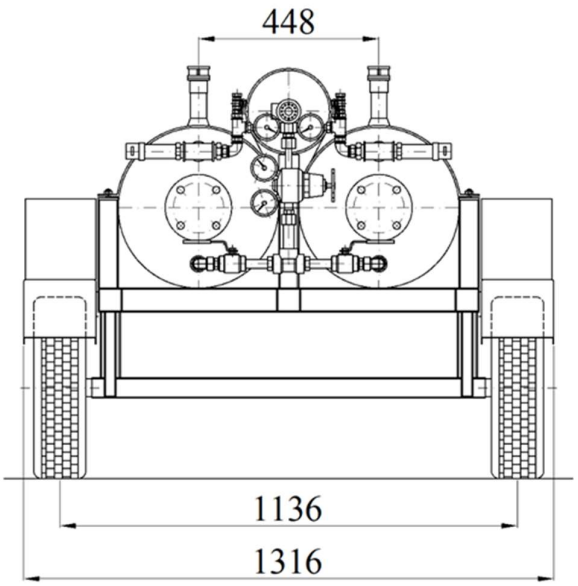

REFERENCE	CAPACITY WATER CYLINDER	CAPACITY FOAM CYLINDER	NITROGEN CYLINDER	WEIGHT (kg)
SX-230	100 Ltr	100 Ltr	27 Ltr	650,0

FOAM MIXING UNIT SX-240 25 -50

Foam tank capacity: 25 Lt and 50 Lt

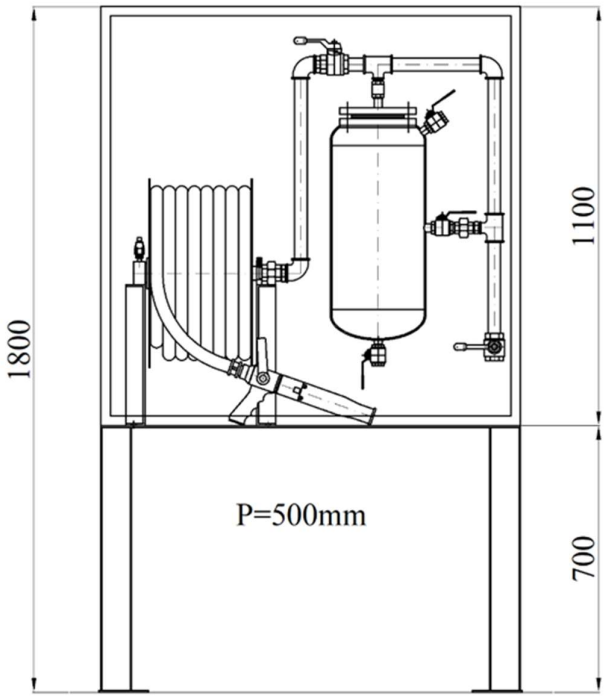

TECHNICAL DATA	
Foam tank capacity	25 Ltr or 50 Ltr
Tank construction code :	I.S.P.E.S.L.
Working pressure :	Min 2.0 Bar
Working time :	25 minute
Hose reel :	Pyton pipe diameter 1" x 25 mt
Coupling codes :	UNI and International standard
MATERIALS	
Body :	Carbon steel (A1), Aluminium (V1), s.s. on request
Tank :	Carbon steel (A1), s.s. on request
Fire hose reel pipe :	Carbon steel (A1), s.s. on request
Rotating joint :	Brass (T1)
Couplings :	Brass (T1)
FINISH	
Painting colour red RAL 3000	

FOAM MIXING UNIT SX-250

Mixing ratio : 3% , 6% with valve

TECHNICAL DATA	
Mixer fitted onboard or remote, on request	
Gear pump :	Electric, diesel or both
Tank construction code :	PED
Mixing ratio :	3% - 6% with valve
MATERIALS	
Skid:	Carbon steel (A1),
Tank :	Carbon steel (A1), stainless steel on request
FINISH	
Painting colour red RAL 3000	

Technical description

The Foam Mixing Unit SX-250 is developed for those cases where a great flow capacity latitude has to be fed by one single foam mixing unit.
The system offers, with his variable capacity foam mixer, the advantage of foaming mixture generation with a flow rate range of 1:10, which means that the minimum flow rate can be approximately one tenth of the maximum one.
Besides the advantage of a huge flexibility in flow rate, this system offers a great simplification given by the use of an atmospheric pressure tank for the storage of the foaming concentrate, differently from other systems such as liquid displacement foam proportioners, where the vessels are exposed to the water line pressure; this offers advantages in cost aspect, as well in simplification of working system.
Foaming tank capacity and the hydraulic characteristics of the injection gear pump are tailored on the specific need of the system to be supplied from time to time.
In case of necessity of flow rates higher than what shown in the table, please contact our Technical Department, for the study of the specific need.

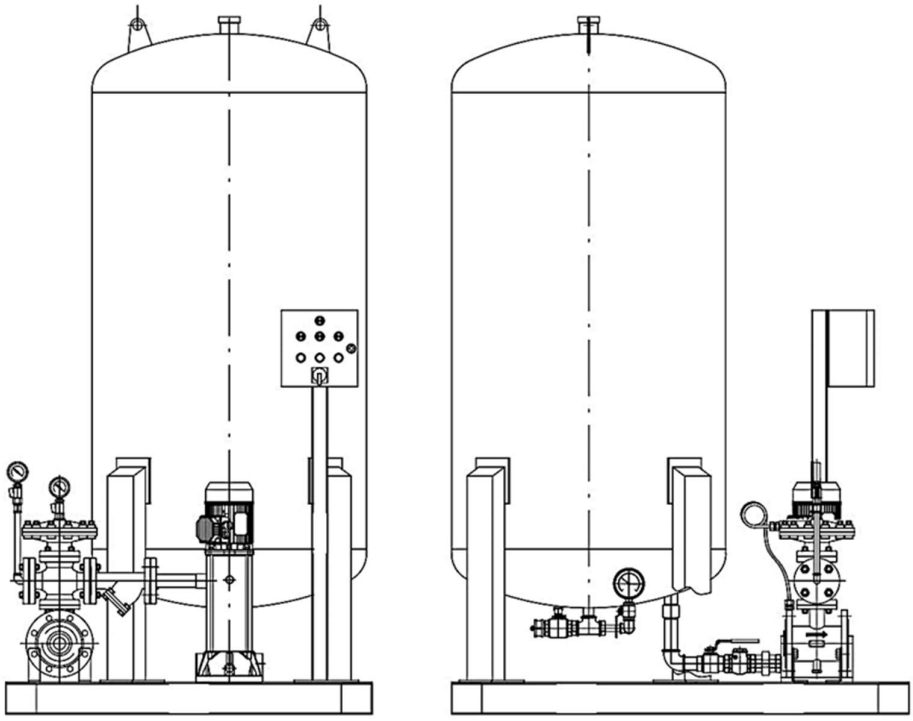

REFERENCE	FLOW RATE RANGE (Ltr. / Min.)
SX-250 - 20	216 - 2160
SX-250 – 30	325 - 3250
SX-250 - 40	475 - 4750
SX-250 - 80	850 - 8700

THE DRAWING IS INDICATIVE ONLY

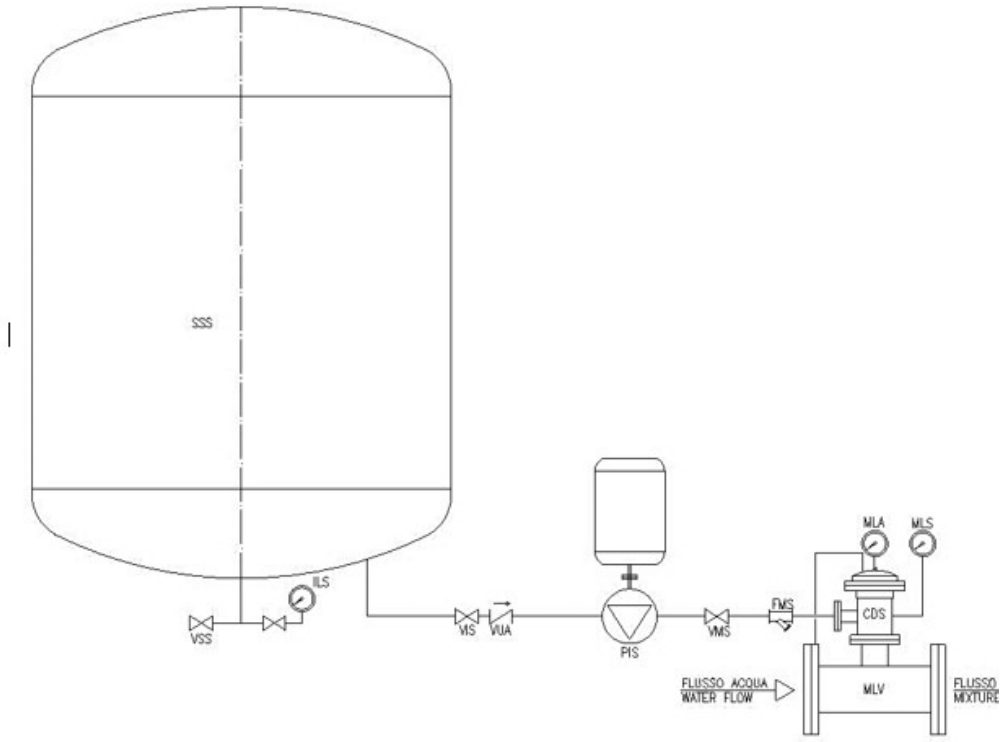

SSS	FOAMNIG STORAGE TANK
VSS	FOAMING DRAIN VALVE
ILS	FOAMNIG LEVEL INDICATOR
VIS	FOAMING INTERCEPTION VALVE
VJA	UNIDIRECTIONAL ASPIRATION VALVE
PIS	FOAMING GEAR PUMP
VMS	FOAMING OUTLET VALVE
FMS	FOAMING OUTLET FILTER
CDS	FOAMING DOSING CHAMBER
MLV	VENTURI ON-LINE MIXER
MLA	WATER LINE PRESSURE GAUGE
MLS	FOAMING LINE PRESSURE GAUGE

MIXER FOR BLADDER TANK SERIES SX-255

This proportioner is designed to be used in combination with the pre-mixers, in vertical and horizontal configuration series SX-200 or SX-215.

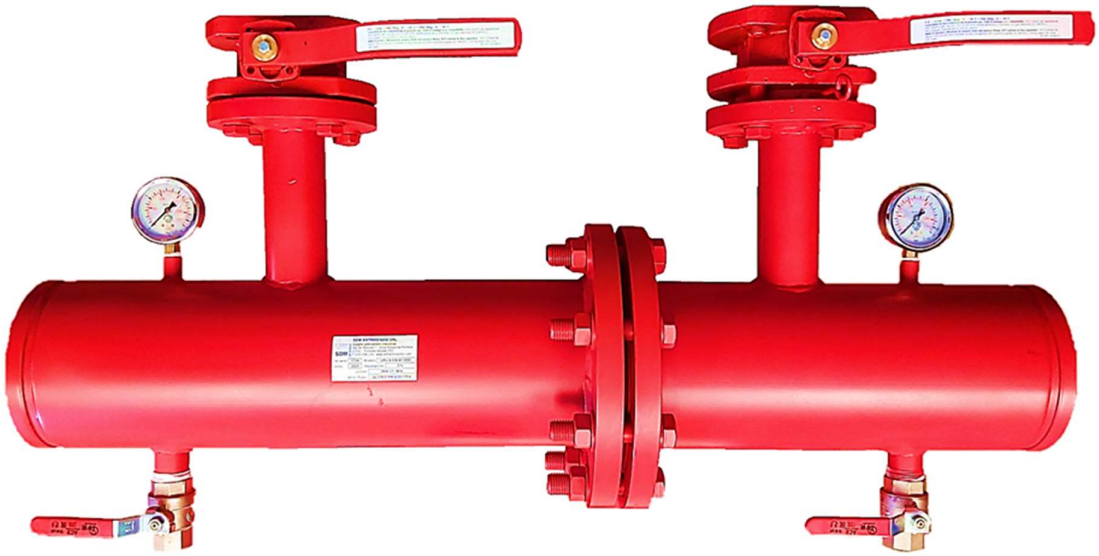

TECHNICAL DATA	
Fitting :	Flange ANSI 150 RF or UNI-DN, grooved
MATERIALS	
Body :	Carbon steel (A1), stainless steel AISI 304(B2), Stainless steel 316 (B3)
Flange :	Carbon steel (A1), stainless steel AISI 304(B2), Stainless steel 316 (B3)
FINISH	
Carbon steel version : painting colour red RAL 3000 Stainless steel version: brushed surface finish	

This product complies with the technical specifications indicated in the standards:

EN 14816:2009 Fixed firefighting systems. Water spray systems. Design and installation
EN 13565-2:2009 Fixed firefighting systems. Foam systems. Design, construction and maintenance
NFPA 11:2010 Standard for Low, Medium, and High - Expansion Foam
NFPA 15:2007 Standard for Water Spray Fixed Systems for Fire Protection
NFPA 16:2011 Standard for the Installation of Foam -Water Sprinkler and Foam -Water Spray Systems

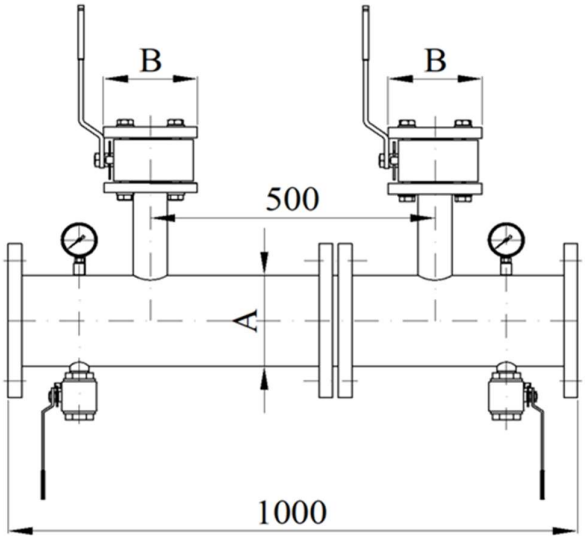

REFERENCE	FLOW RATE RANGE LTR / Min			A	B	WEIGHT Kg.
	Min	Media (*)	Max			
SX-255 – 1"1/2 A	50	175	300	1"1/2	1"	15,6
SX-255 – 2" A	75	263	450	2"	1"	18,4
SX-255 – 2"1/2 A	100	375	650	2"1/2	1"1/2	22,9
SX-255 – 2"1/2 B	120	450	780			22,9
SX-255 – 3" A	150	575	1000	3"	1"1/2	25,7
SX-255 – 3" B	200	750	1300			25,7
SX-255 – 4" A	250	950	1650	4"	1"1/2	28,7
SX-255 – 4" B	400	1525	2650		2"	32,2
SX-255 – 6" A	500	2000	3500	6"	2"	39,8
SX-255 – 6" B	650	2600	4550			39,8
SX-255 – 6" C	750	3000	5250			39,8
SX-255– 8" A	1000	3750	6500	8"	2"1/2	52,5
SX-255– 8" B	1200	4500	7800			52,5
SX-255 – 10" A	1500	5750	10000	10"	3"	72,2

(*) The standard water and foam nozzle sizing is performed using the mean flow value at the working pressure of 8 bar. Sizing with other values can be provided on request

The follows "Pressures Loss" tables refer to standard water and foam nozzles sized as above.

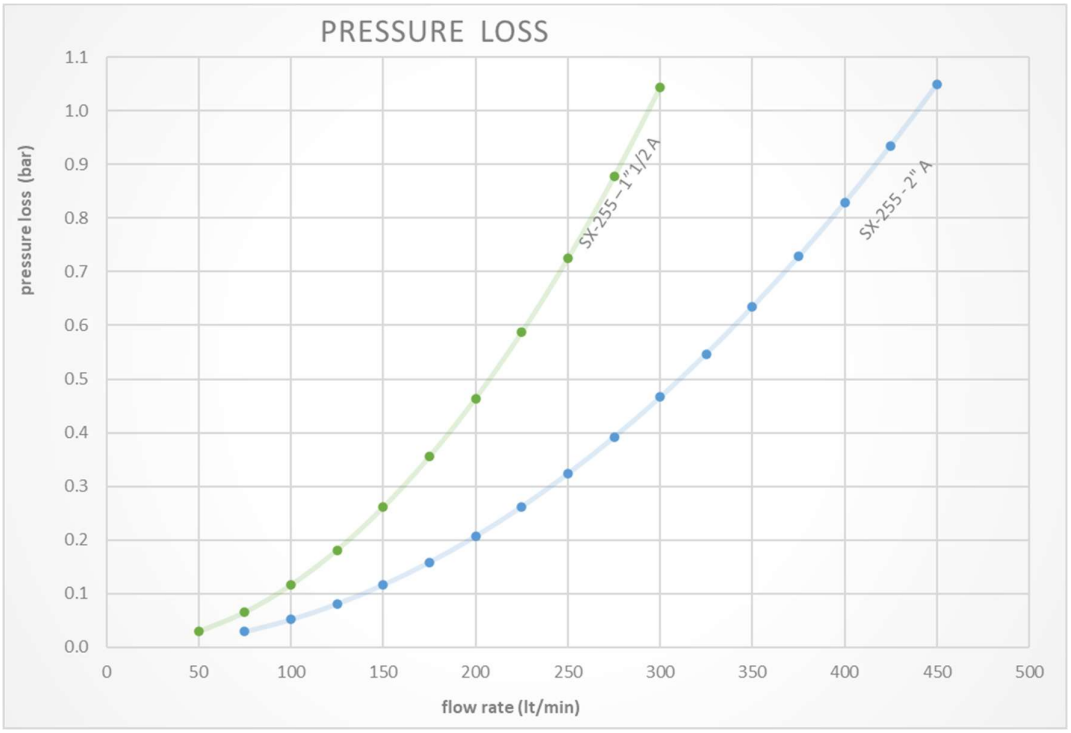
PRESSURE LOSS
pressure loss (bar)
flow rate (lt/min)
SX-255 – 1"1/2 A
SX-255 - 2" A
0.0
0.1
0.2
0.3
0.4
0.5
0.6
0.7
0.8
0.9
1.0
1.1
0
50
100
150
200
250
300
350
400
450
500

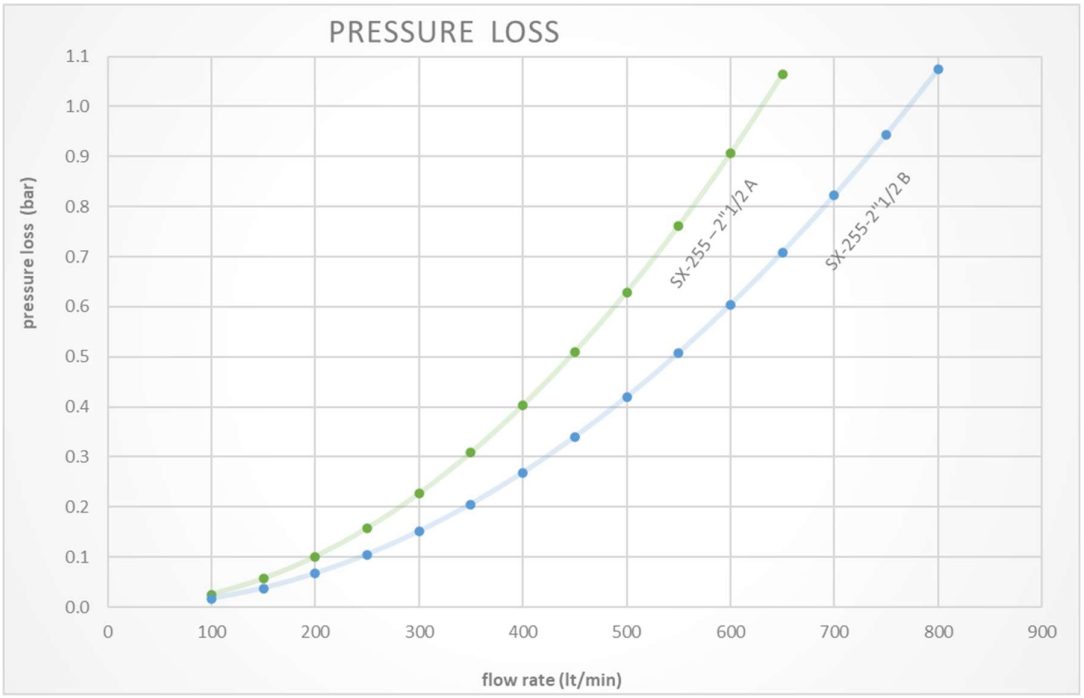
PRESSURE LOSS
pressure loss (bar)
flow rate (lt/min)
SX-255 – 2"1/2 A
SX-255-2"1/2 B
0.0
0.1
0.2
0.3
0.4
0.5
0.6
0.7
0.8
0.9
1.0
1.1
0
100
200
300
400
500
600
700
800
900

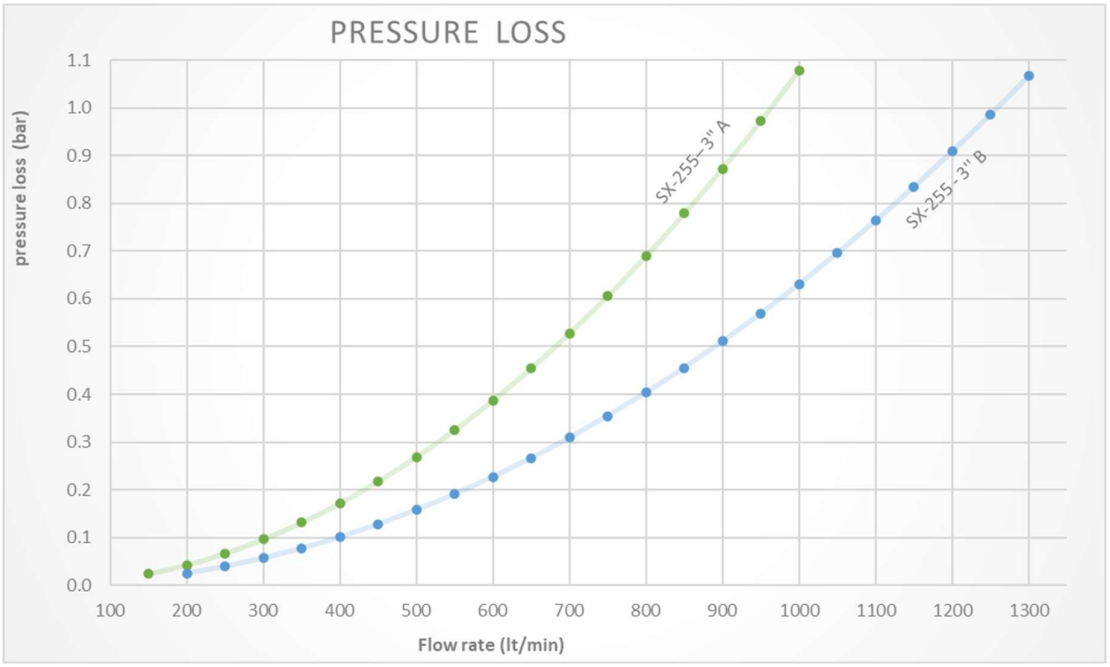
PRESSURE LOSS
pressure loss (bar)
1.1
1.0
0.9
0.8
0.7
0.6
0.5
0.4
0.3
0.2
0.1
0.0
100 200 300 400 500 600 700 800 900 1000 1100 1200 1300
Flow rate (lt/min)
SX-255-3" A
SX-255-3" B

PRESSURE LOSS
pressure loss (bar)
1.1
1.0
0.9
0.8
0.7
0.6
0.5
0.4
0.3
0.2
0.1
0.0
200 400 600 800 1000 1200 1400 1600 1800 2000 2200 2400 2600
Flow rate (lt/min)
SX-255-4" A
SX-255-4" B

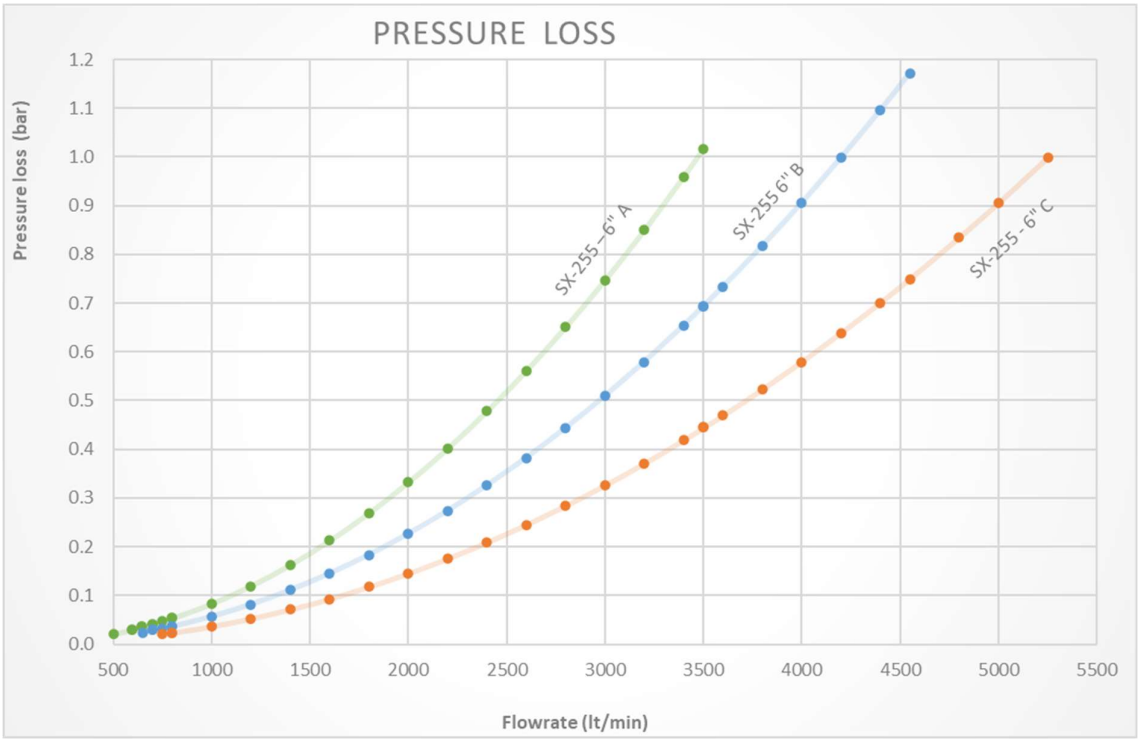
PRESSURE LOSS
Pressure loss (bar)
1.2
1.1
1.0
0.9
0.8
0.7
0.6
0.5
0.4
0.3
0.2
0.1
0.0
500
1000
1500
2000
2500
3000
3500
4000
4500
5000
5500
Flowrate (lt/min)
SX-255 – 6" A
SX-255 6" B
SX-255 - 6" C

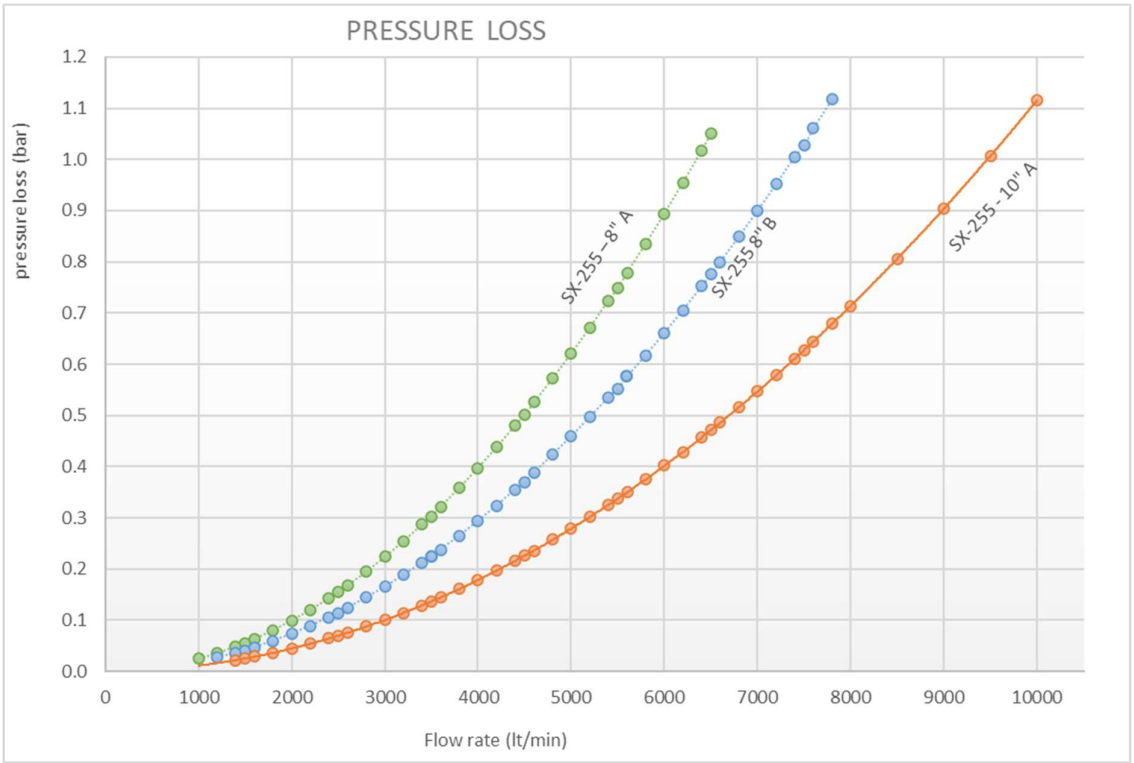
PRESSURE LOSS
pressure loss (bar)
1.2
1.1
1.0
0.9
0.8
0.7
0.6
0.5
0.4
0.3
0.2
0.1
0.0
0
1000
2000
3000
4000
5000
6000
7000
8000
9000
10000
Flow rate (lt/min)
SX-255 – 8" A
SX-255 8" B
SX-255 - 10" A

MIXER FOR BLADDER TANK SERIES SX-256 WR

This mixer is designed to be used in combination with the SX-200 and SX-215 series pre-mixers, in vertical and horizontal configuration.

This special type of mixer offers accurate mixing with variable percentages within a very wide range of flow rates (Wide Range).

Mixing ratio : Fixed equal 1%, 3% or 6%

TECHNICAL DATA	
Mixing ratio	Fixed equal 1%, 3% or 6%
MATERIALS	
Body :	Bronze (T5)
Internal part	s.s. AISI 316 (B3)
FINISH	
Brushed	

REFERENCE	FLOW RATE RANGE (Lt / min)		D1	D2	A (mm)	B (mm)	C (mm)	WEIGHT (Kg)	
	min	max						SX-256 WR	WR
SX-256 WR/WR 100	80	2450	4”	2”	216	294	70	45	15
SX-256 WR/WR 150	110	5500	6”	2”	241	349	70	67	23
SX-256 WR/WR 200	125	10500	8”	3”	291	426	82	99	39
SX-256 WR/WR 250	150	16000	10”	3”	320	477	82	137	48

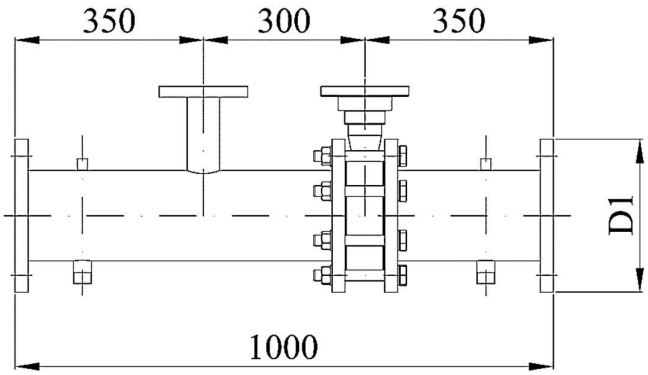
350
300
350
D1
1000

SX-256 WR

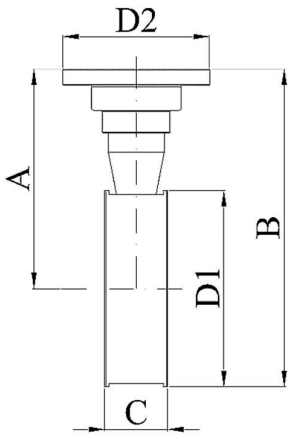
D2
A
B
D1
C

WR

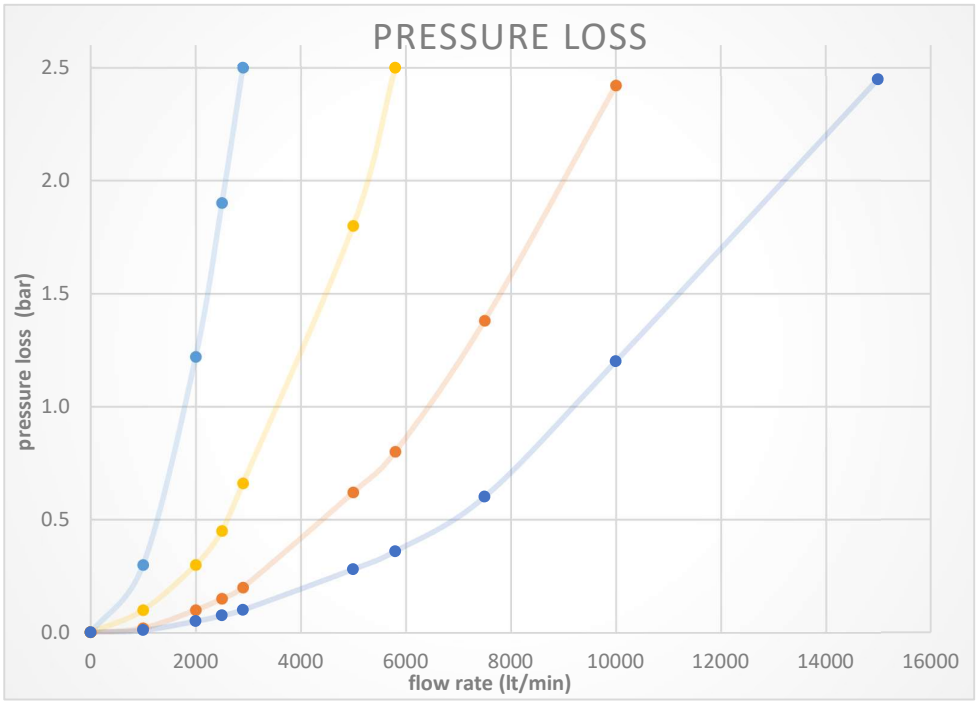
PRESSURE LOSS
pressure loss (bar)
2.5
2.0
1.5
1.0
0.5
0.0
0
2000
4000
6000
8000
10000
12000
14000
16000
flow rate (lt/min)

ON_LINE MIXER SERIES SX-220 PROPORTIONERS

The SX-220 range mixers (also called “proportioners”) provide the correct mixing of water and foaming by means of a constant control of the respective supply lines pressures. All this is achieved through an automatic measuring valve provided with a variable orifice placed on the foaming line where the percentage to mix is supplied proportionally to the instant water capacity.

To assure a perfect functioning, the supply pressure of the foaming must be kept always higher than the water flow pressure of at least 1 bar.

These devices are particularly suitable to be used in high capacity fire-fighting systems, mainly in plants with many users to be powered at the same time.

WORKING PRINCIPLE

The required mixing ratio (ratio between the foaming and water capacities) is kept constant thanks to the adopted special technical solution. In the below working scheme of the SX-220 mixer, we can single out 4 functional parts:

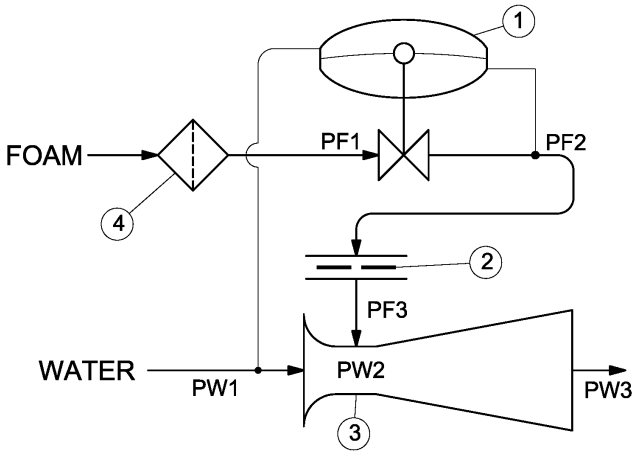

1) **Plenum valve**: this element regulates the foaming capacity (FOAM) according to the pressure difference between the two lines: the water supply line (PW1) and the foam supply line (PF2); in this way it's possible to keep the mixing ratio constant, even when the lines pressures change.

2) **Mix calibration device:** this element allows to graduate the required mixing ratio. For this purpose, two equivalent devices can be used: the **orifice meter** or the **ball valve**.

3) **Venturi tube**: this element generates the line pressure drop down to a pressure level (PW2) which allows the foaming input; in this way it's possible to keep the mixing ratio always constant, even when the line pressure changes.

4) **Y filter**: this element retains all the impurities which the foaming may contain, thus avoiding possible occlusions inside the mixer.

To assure a proper functioning, the foam supply pressure must always be kept higher of at least 1 bar than that of the water flow.

The pressure gauges allow to check the correct functioning of the mixer showing the pressure levels in the plenum chambers, that is, the pressure of the foaming (PF2) and the line pressure (PW1).

Configuration - STANDARD

REFERENCE	Water Flange		Foam Flange		A (mm)	B (mm)	C (mm)	D (mm)	Weight (kg)
	PN16	ANSI 150	PN16	ANSI 150					
SX-220 0100 MMXY	DN 100	4''	DN 40	1½''	205	600	209	300	65
SX-220 0125 MMXY	DN 125	5''	DN 40	1½''	250	612	221	300	69
SX-220 0150 MMXY	DN 150	6''	DN 50	2''	300	660	269	347	86
SX-220 0200 MMXY	DN 200	8''	DN 50	2''	400	680	289	347	103
SX-220 0250 MMXY	DN 250	10''	DN 65	2½''	500	758	317	433	163
SX-220 0300 MMXY	DN 300	12''	DN 65	2½''	602	786	345	433	193
SX-220 0350 MMXY	DN 350	14''	DN 65	2½''	692	803	362	433	231

Configuration - OPTIONAL

REFERENCE	Water Flange		Foam Flange		A (mm)	B (mm)	C (mm)	D (mm)	Weight (kg)
	PN16	ANSI 150	PN16	ANSI 150					
SX-220 0100 MMXY	DN 100	4''	DN 40	1½''	205	664	273	300	72
SX-220 0125 MMXY	DN 125	5''	DN 40	1½''	250	676	285	300	76
SX-220 0150 MMXY	DN 150	6''	DN 50	2''	300	730	339	347	95
SX-220 0200 MMXY	DN 200	8''	DN 50	2''	400	750	359	347	112
SX-220 0250 MMXY	DN 250	10''	DN 65	2½''	500	852	411	433	179
SX-220 0300 MMXY	DN 300	12''	DN 65	2½''	602	880	439	433	209
SX-220 0350 MMXY	DN 350	14''	DN 65	2½''	692	897	456	433	247

Where:
A = length of the lower body
B = height of the pressure gauge from the water duct axis
C = height of the foaming line from the water line
D = side overall dimension with the filter

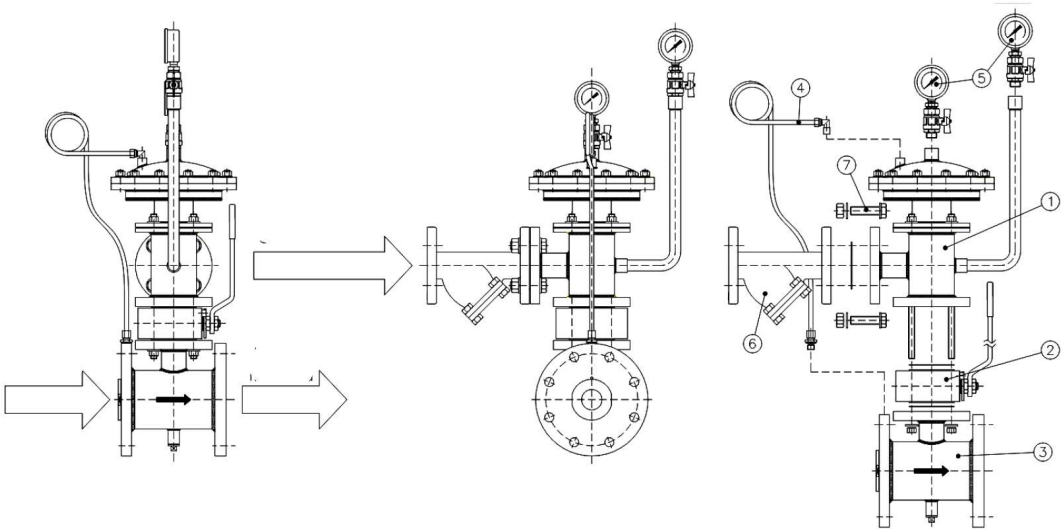

A complete user manual, including service instructions and spare parts list is available at our offices upon request and at no cost for our customers.

HOLLOW CONE NOZZLE SERIES SX-700

Thanks to their particular design that does not require an internal vortex, E type spiral nozzles produce a full cone jet and guarantee exceptional resistance to clogging risks as well as an excellent spray distribution which makes them particularly effective in cooling processes. The spray angle remains almost constant even in the presence of pressure drops.

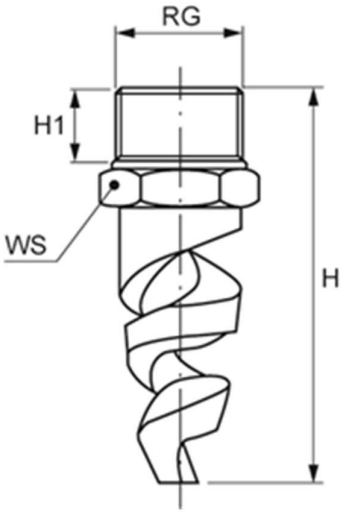

TECHNICAL DATA	
Inlet	Thread
Coupling:	male BSPT, male NPT
MATERIALS	
Body	Stainless Steel AISI 316L , brass

	Code	RG	D	D1	Flow rate (lpm) at different pressure values (bar)							H	H1	WS
		inch	mm	mm	0,7	1,0	2,0	3,0	5,0	7,0	10	mm	mm	mm
60°	EBQ 1550 xx	1/4"	2,4	2,4	2,66	3,18	4,49	5,50	7,10	8,40	10,0	45	12	14
	EBQ 2156 xx		4,0	3,2	7,54	9,01	12,7	15,6	20,1	23,8	28,5			
	ECQ 2230 xx	3/8"	4,8	3,2	11,4	13,6	19,2	23,5	30,3	35,9	42,9	48	14	19
	ECQ 2410 xx		6,4	3,2	20,0	24,0	33,9	41,5	53,6	63,4	75,8			
	ECQ 2640 xx		7,9	3,2	31,2	37,3	52,7	64,6	83,4	99,0	118			
	EDQ 2940 xx	1/2"	9,5	4,7	45,6	54,5	77,1	94,4	122	144	172	64	18	22
	EDQ 3128 xx		11,1	4,7	61,8	73,9	105	128	165	196	234			
	EEQ 3165 xx	3/4"	12,7	4,7	79,7	95,3	135	165	213	252	301	70	19	27
	EFQ 3260 xx	1"	15,9	6,3	126	150	212	260,0	336	397	475	92	26	34
	EHQ 3507 xx	1-1/2"	22,2	7,9	245	293	414	507	655	774	926	111	27	50

	Code	RG	D	D1	Flow rate (lpm) at different pressure values (bar)							H	H1	WS
		inch	mm	mm	0,7	1,0	2,0	3,0	5,0	7,0	10	mm	mm	mm
90°	EBU 2156 xx		4,0	3,2	7,54	9,01	12,7	15,6	20,1	23,8	28,5			
	ECU 2230 xx	3/8"	4,8	3,2	11,4	13,6	19,2	23,5	30,3	35,9	42,9	48	14	19
	ECU 2317 xx		5,6	3,9	15,3	18,3	25,9	31,7	40,9	48,4	57,9			
	ECU 2410 xx		6,4	4,8	20,0	24,0	33,9	41,5	53,6	63,4	75,8			
	ECU 2640 xx		7,9	5,5	31,2	37,3	52,7	64,6	83,4	99,0	118			
	EDU 2940 xx	1/2"	9,5	3,3	45,6	54,5	77,1	94,4	122	144	172	64	18	22
	EDU 3128 xx		11,1	3,7	61,8	73,9	105,0	128	165	196	234			
	EEU 3165 xx	3/4"	12,7	4,7	79,7	95,3	135	165	213	252	301	70	19	27
	EFU 3260 xx	1"	19,0	6,3	126	150	212	260	336	397	475	92	26	34
	EFU 3372 xx		23,0	6,3	180	215	304	372	480	568	679			
	EKU 4109 xx	2"	34,9	11,1	527	629	890	1090	1407	1665	1990	149	31	65
	EMU 4204 xx	3"	44,5	14,3	985	1178	1666	2040	2633	3116	3724	219	42	89
	EMU 4267 xx		50,8	14,3	1290	1541	2180	2670	3447	4078	4874			

	Code	RG	D	D1	Flow rate (gpm) at different pressure values (psi)							H	H1	WS
		inch	inch	inch	10	15	30	40	70	100	140	inch	inch	inch
120°	EBW 1550 xx	1/4"	0,094	0,094	0,70	0,86	1,21	1,40	1,85	2,21	2,62	1-49/64"	15/32"	35/64"
	EBW 2100 xx		0,126	0,126	1,27	1,56	2,21	2,55	3,37	4,03	4,76			
	EBW 2156 xx		0,157	0,126	1,99	2,43	3,44	3,97	5,25	6,28	7,43			
	ECW 2156 xx	3/8"	0,157	0,126	1,99	2,43	3,44	3,97	5,25	6,28	7,43	1-57/64"	35/64"	3/4"
	ECW 2230 xx		0,189	0,126	2,99	3,66	5,18	5,98	7,92	9,46	11,2			
	ECW 2317 xx		0,220	0,157	4,04	4,94	6,99	8,07	10,7	12,8	15,1			
	ECW 2410 xx		0,252	0,157	5,28	6,47	9,15	10,6	14,0	16,7	19,8			
	ECW 2640 xx		0,311	0,157	8,22	10,1	14,2	16,4	21,8	26,0	30,8			
	EDW 2940 xx	1/2"	0,374	0,189	12,0	14,7	20,8	24,0	31,8	38,0	45,0	2-33/64"	45/64"	7/8"
	EDW 3104 xx		0,382	0,189	13,2	16,2	22,9	26,5	35,0	41,9	49,5			
	EDW 3128 xx		0,437	0,189	16,3	20,0	28,2	32,6	43,1	51,5	61,0			
	EEW 3165 xx	3/4"	0,500	0,189	21,0	25,7	36,4	42,0	55,6	66,4	78,6	2-3/4"	3/4"	1-1/16"
	EFW 3260 xx	1"	0,626	0,248	33,1	40,5	57,3	66,2	87,6	105	124	3-5/8"	1-1/32"	1-11/32"
	EFW 3372 xx		0,748	0,248	47,4	58,0	82,0	94,7	125	150	177			
	EHW 3507 xx	1-1/2"	0,874	0,311	64,5	79,1	112	129	171	204	242	4-3/8"	1-1/16"	1-31/32"
	EHW 3663 xx		1,000	0,311	84,4	103	146	169	223	267	316			
	EHW 3747 xx		1,126	0,311	95,1	116	165	190	252	301	356			
	EKW 4109 xx	2"	1,374	0,437	139	170	240	278	367	439	519	5-7/8"	1-7/32"	2-9/16"
	EKW 4139 xx		1,500	0,437	177	217	307	354	469	560	663			
	EMW 4204 xx	3"	1,752	0,563	260	318	450	519	687	821	972	7-63/64"	1-3/8"	3-35/64"
	EMW 4267 xx		2,008	0,563	337	413	584	675	893	1067	1262			
	EPW 4412 xx	4"	2,500	0,626	525	642	909	1049	1388	1659	1963	9-1/16"	1-37/64"	5"

	Code	RG	D	D1	Flow rate (gpm) at different pressure values (psi)							H	H1	WS
		inch	inch	inch	10	15	30	40	70	100	140	inch	inch	inch
150°	ECX 2230 xx	3/8"	0,189	0,126	2,99	3,66	5,18	5,98	7,92	9,46	11,2	1-57/64"	35/64"	3/4"
	ECX 2317 xx		0,220	0,157	4,04	4,94	6,99	8,07	10,7	12,8	15,1			
	ECX 2410 xx		0,252	0,157	5,28	6,47	9,15	10,6	14,0	16,7	19,8			
	ECX 2640 xx		0,311	0,157	8,22	10,1	14,2	16,4	21,8	26,0	30,8			
	EDX 2940 xx	1/2"	0,374	0,189	12,0	14,7	20,8	24,0	31,8	38,0	45,0	2-33/64"	45/64"	55/64"
	EDX 3128 xx		0,437	0,189	16,3	20,0	28,2	32,6	43,1	51,5	61,0			
	EEX 3165 xx	3/4"	0,500	0,189	21,0	25,7	36,4	42,0	55,6	66,4	78,6	2-3/4"	3/4"	1-1/16"
	EFX 3260 xx	1"	0,626	0,248	33,1	40,5	57,3	66,2	87,6	105	124	3-5/8"	1-1/32"	1-11/32"
	EFX 3372 xx		0,748	0,248	47,4	58,0	82,0	94,7	125	150	177			
	EHX 3507 xx	1-1/2"	0,874	0,311	64,5	79,1	112	129	171	204	242	4-3/8"	1-1/16"	1-31/32"
	EHX 3663 xx		1,000	0,311	84,4	103	146	169	223	267	316			
	EHX 3747 xx		1,126	0,311	95,1	116	165	190	252	301	356			
	EKX 4109 xx	2"	1,374	0,437	139	170	240	278	367	439	519	5-55/64"	1-7/32"	2-9/16"
	EKX 4139 xx		1,500	0,437	177	217	307	354	469	560	663			

	Code	RG	D	D1	Flow rate (gpm) at different pressure values (psi)							H	H1	WS
		inch	inch	inch	10	15	30	40	70	100	140	inch	inch	inch
180°	EBZ 2156 xx	1/4"	0,157	0,098	1,99	2,43	3,44	3,97	5,25	6,28	7,43	1-49/64"	15/32"	35/64"
	ECZ 2230 xx	3/8"	0,189	0,126	2,99	3,66	5,18	5,98	7,92	9,46	11,2	1-57/64"	35/64"	3/4"
	ECZ 2317 xx		0,220	0,157	4,04	4,94	6,99	8,07	10,7	12,8	15,1			
	ECZ 2410 xx		0,252	0,157	5,28	6,47	9,15	10,6	14,0	16,7	19,8			
	ECZ 2640 xx		0,311	0,157	8,22	10,1	14,2	16,4	21,8	26,0	30,8			
	EDZ 2940 xx	1/2"	0,374	0,130	12,0	14,7	20,8	24,0	31,8	38,0	45,0	2-33/64"	45/64"	55/64"
	EDZ 3128 xx		0,437	0,189	16,3	20,0	28,2	32,6	43,1	51,5	61,0			
	EEZ 3165 xx	3/4"	0,500	0,185	21,0	25,7	36,4	42,0	55,6	66,4	78,6	2-3/4"	3/4"	1-1/16"
	EFZ 3260 xx	1"	0,626	0,248	33,1	40,5	57,3	66,2	87,6	105	124	3-5/8"	63/64"	1-27/64"
	EFZ 3372 xx		0,748	0,248	47,4	58,0	82,0	94,7	125	150	177			
	EHZ 3507 xx	1-1/2"	0,874	0,311	64,5	79,1	112	129	171	204	242	4-3/8"	1-1/16"	1-31/32"
	EHZ 3663 xx		1,000	0,311	84,4	103	146	169	223	267	316			
	EHZ 3747 xx		1,126	0,311	95,1	116	165	190	252	301	356			
	EKZ 4109 xx	2"	1,374	0,437	139	170	240	278	367	439	519	5-55/64"	1-7/32"	2-31/64"
	EKZ 4139 xx		1,500	0,437	177	217	307	354	469	560	663			

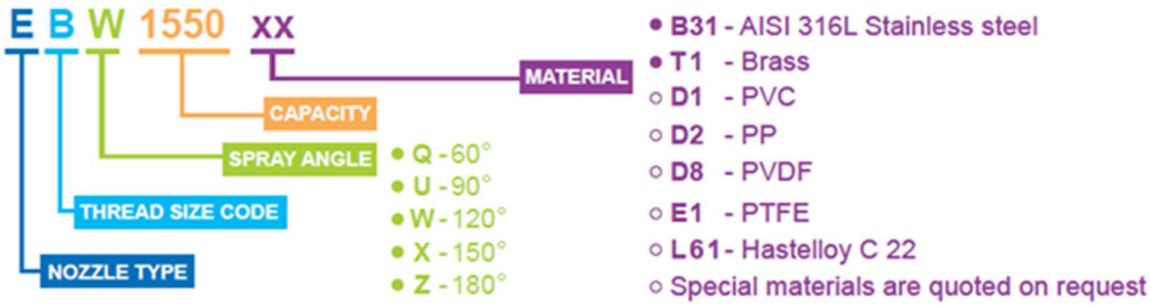

FULL CONE NOZZLE SERIES SX-710 - AA

The AA series full cone nozzles, made up of an internal grooved disc vortex, order uniform distribution of the jet and perfect coverage of the area to be protected.

TECHNICAL DATA	
Inlet	Thread
Coupling:	male BSPT, male NPT
MATERIALS	
Body	Stainless Steel AISI 316L , brass

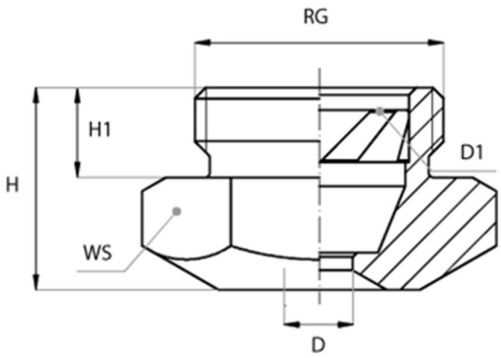

	Code	RG	D	D1	Flow rate (lpm) at different pressure values (bar)								H	H1	WS
		inch	mm	mm	0,5	0,7	1,0	2,0	3,0	5,0	7,0	10	mm	mm	mm
90°	AAU 2305 xx	3/4"	6,1	3,0	12,5	14,7	17,6	24,9	30,5	39,4	46,6	55,7	22	10	32
	AAU 2385 xx		6,7	3,0	15,7	18,6	22,2	31,4	38,5	49,7	58,8	70,3			
	AAU 2490 xx		7,8	4,0	20,0	23,7	28,3	40,0	49,0	63,3	74,8	89,4			
	AAU 2610 xx	1"	9,0	4,0	24,9	29,5	35,2	49,8	61,0	78,7	93,1	111	27	12	40
	AAU 2780 xx		10,5	5,0	31,9	37,7	45,1	63,7	78,0	101	119	142			
	AAU 3123 xx	1-1/4"	12,5	6,0	50,2	59,4	71,0	100	123	158	187	224	30	14	50
	AAU 3194 xx	1-1/2"	16,0	6,0	79,2	93,8	112	158	194	250	296	354	35	16	60
	AAU 3310 xx	2"	20,0	7,0	127	150	179	253	310	400	473	564	45	18	75
	AAU 3386 xx		23,0	9,0	158	186	223	315	386	498	589	703			
	AAU 3490 xx	2-1/2"	25,0	12,0	200	237	283	400	490	632	748	894	52	22	90
	AAU 3610 xx		28,5	13,0	249	295	352	498	610	787	931	1112			
	AAU 3775 xx	3"	32,0	16,0	317	375	448	633	775	1000	1183	1412	60	24	110
120°	AAW 2490 xx	3/4"	7,9	3,0	20,0	23,7	28,3	40,0	49,0	63,3	74,8	89,4	38	11	32
	AAW 2780 xx	1"	10,6	6,0	31,9	37,7	45,1	63,7	78,0	101	119	142	47	15	40
	AAW 3123 xx	1-1/4"	12,7	6,0	50,2	59,4	71,0	100	123	158	187	224	62	19	50
	AAW 3194 xx	1-1/2"	16,0	6,0	79,2	93,8	112	158	194	250	296	354	77	21	50
	AAW 3310 xx	2"	20,0	10,0	127	150	179	253	310	400	473	564	99	24	60
	AAW 3386 xx		22,7	10,0	158	186	223	315	386	498	589	703			
	AAW 3490 xx	2-1/2"	25,5	12,0	200	237	283	400	490	632	748	894	123	27	75
	AAW 3610 xx		30,0	13,0	249	295	352	498	610	787	931	1112			
	AAW 3775 xx	3"	32,0	14,0	317	375	448	633	775	1000	1183	1412	150	30	85

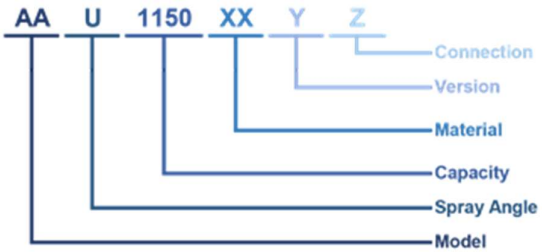

G = BSPP Thread		N = NPT Thread
S = Standard		E = Exagonal Body
B1 = AISI 303 s.s.	B31 = AISI 316L s.s.	T1 = Brass
D1 = PVC	D2 = PP	E1 = PTFE
See table		
U = 90°		W = 120°
AA Series		

FULL CONE SPIRAL NOZZLE SERIES SX-720 - B

BF BH full cone nozzle has a simple two-piece design producing a square section spray pattern. They are the convenient choice where the coverage of a surface is required to be as even as possible. Their X-vane ensures uniform spray distribution and resistance to clogging, also when working with large capacities. The sides of the square spray section are not aligned with the grooves of the nozzle orifice and the offset angle is between 10° and 15° depending on working pressure and distance from the impact surface. Therefore, utmost attention must be paid during the nozzles overlay setting. They must be carefully aligned and adjusted according to the operating situation.

TECHNICAL DATA	
Inlet	Threated
Coupling:	male BSPT, male NPT
MATERIALS	
Body	Stainless Steel AISI 316L , brass

REFERENCE BF

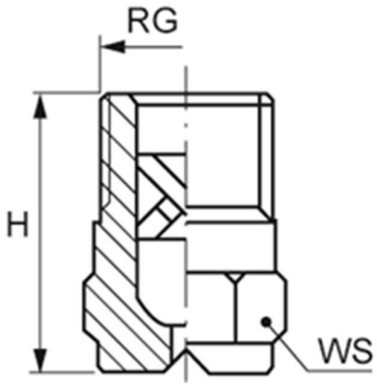

REFERENCE BH

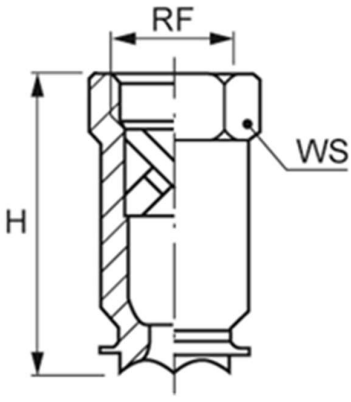

Standard spray angle

BFS	BHQ	Code	RF RG	D	D1	Flow rate (lpm) at different pressure values (bar)							Spray angle (degrees) at pressure (bar)			H	WS	DIA	W
			inch	mm	mm	0,7	1,0	2,0	3,0	5,0	7,0	10	0,7	3,0	5,0	mm	mm	mm	kg
	•	1270	1/8"	1,7	1,3	1,30	1,56	2,20	2,70	3,49	4,12	4,93	52	60	58	22	12		0,01
	•	1350		1,9	1,3	1,74	2,08	2,94	3,60	4,65	5,50	6,57	58	60	60				
	•	1440		2,2	1,3	2,13	2,54	3,59	4,40	5,68	6,72	8,03	60	65	60				
	•	1740	1/4"	2,8	1,6	3,57	4,27	6,04	7,40	9,55	11,3	13,5	62	65	60	23	14		0,02
	•	1890		3,2	1,6	4,30	5,14	7,27	8,90	11,5	14	16,2	62	65	60				
	•	2107		3,8	1,6	5,17	6,18	8,74	10,7	13,8	16,3	19,5	65	65	60				
	•	2133	3/8"	4,0	2,4	6,42	7,68	10,9	13,3	17,2	20,3	24,3	60	62	60	30	17		0,03
	•	2210	1/2"	5,5	3,2	10,1	12,1	17,2	21,0	27,1	32,1	38,3	62	64	60	39	21		0,04
	•	2270		6,4	3,2	13,0	15,6	22,0	27,0	34,8	41,2	49,2	62	65	60				
	•	2370	3/4"	6,7	4,4	17,8	22,0	31,0	37,0	47,8	56,5	67,5	60	64	62	55	27	32	0,20
•		2780	1"	1,9	1,3	37,7	45,2	64,3	78,0	101	120	142	77	78	75	70	32	38	0,35
•		3131	1-1/4"	2,4	1,3	63,3	75,6	107	131	169	200	239	77	78	73	88	40		0,55
•		3170	1-1/2"	2,8	1,6	82,1	98,1	139	170	219	260	310	75	78	70	102	50		0,80
•		3215	2"	3,2	1,6	104	124	176	215	278	328	392	65	72	68	138	60		1,60
•		3265		3,8	1,6	128	153	216	265	342,0	405	484	73	75	68				
•		3355		1,6	1,3	171	205	290	355	458	542	648	73	75	70				
•		3360	2-1/2"	1,9	1,3	174	208	294	360	465	550	657	64	70	63	175	85		2,00
•		3435		2,4	1,3	210	251	355	435	562	664	794	75	80	73				
•		3700		2,8	1,6	338	404	571	700	904	1069	1278	73	76	74				
•		4220	5"	1,9	1,3	1063	1270	1796	2200	2840	3361	4017	73	75	72	311	170		18,00
•		4420	6"	2,4	1,3	2029	2425	3429	4200	5422	6416	7668	75	78	74	366	200		25,00

Wide spray angle

BFW	BHW	Code	RF RG	D	D1	Flow rate (lpm) at different pressure values (bar)							Spray angle (degrees) at pressure (bar)			H	WS	DIA	W
			inch	mm	mm	0,7	1,0	2,0	3,0	5,0	7,0	10	0,7	3,0	5,0	mm	mm	mm	kg
	•	2100	1/4"	3,2	1,6	4,83	5,77	8,16	10,0	12,9	15,3	18,3	106	115	100	23	14		0,02
	•	2122	3/8"	3,9	1,6	5,89	7,04	9,96	12,2	15,8	18,6	22,3	105	120	110	30	17		0,03
	•	2144		4,0	2,4	6,96	8,31	11,8	14,4	18,6	22,0	26,3	105	120	110				
	•	2172		4,6	2,4	8,31	9,93	14,0	17,2	22,2	26,3	31,4	105	120	105				
	•	2194		5,4	2,4	9,37	11,2	15,8	19,4	25,0	29,6	35,4	105	120	106				
	•	2220	1/2"	4,8	3,0	10,6	12,7	18,0	22,0	28,4	33,6	40,2	105	110	105	39	21		0,04
	•	2250		5,1	3,0	12,1	14,4	20,4	25,0	32,3	38,2	45,6	105	110	105				
	•	2290		5,7	3,0	14,0	16,7	23,7	29,0	37,4	44,3	53,0	105	110	105				
	•	2320		7,0	3,0	15,4	18,5	26,1	32,0	41,3	48,9	58,4	105	110	105				
	•	2360		8,0	3,0	17,4	20,8	29,4	36,0	46,5	55,0	65,7	105	110	105				
•	•	2500	3/4"	8,5	4,5	24,2	28,9	40,8	50,0	64,5	76,4	91,3	105	115	103	55	27	32	0,20
•	•	2930	1"	11,6	5,6	44,9	53,7	75,9	93,0	120	142	170	107	110	106	70	32	38	0,35
•		3134	1-1/4"	14,5	6,0	64,7	77,4	109	134	173	205	245	108	110	107	88	40		0,55
•		3200	1-1/2"	18,2	9,0	96,6	115	163	200	258	305	365	108	115	108	102	50		0,80
•		3395	2"	24,0	11,1	191	228	322	395	510	603	721	110	112	108	138	60		1,60
•		3590	2-1/2"	26,0	14,3	285	341	482	590	761	901	1077	110	115	110	175	85		2,00
•		3800	3"	31,5	17,5	386	462	653	800	1032	1220	1460	110	120	110	187	100		7,80

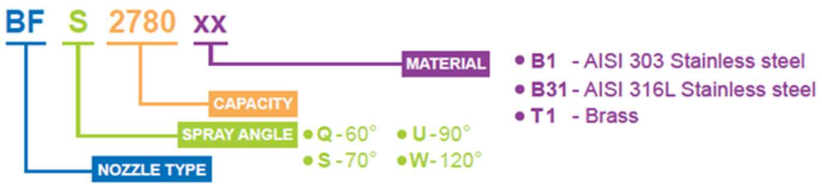

FULL CONE NOZZLE SERIES SX-730 - D

SX-730 D full cone nozzle with wide passage X-vanes offers a full choice of spray angles, capacities ranging from 1.18 and 1.420 l/min and connections from 1/8″ to 4″. In continuous casting cooling and other specific applications, they are used spraying upwards and operate at very high temperatures. The X-vane is safely locked into place for all dimensions up to 3/8″, to avoid it may escape from the nozzle body in case of size changes due to temperature variations, and allows to assemble the nozzle with any desired orientation. Excellent mist effect and a wide variety of applications make SX-230 D full cone nozzle an optimal choice.

TECHNICAL DATA	
Inlet	Threated
Coupling:	male BSPT, male NPT
MATERIALS	
Body	Stainless Steel AISI 316L , brass

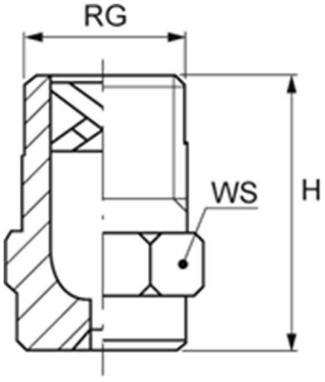

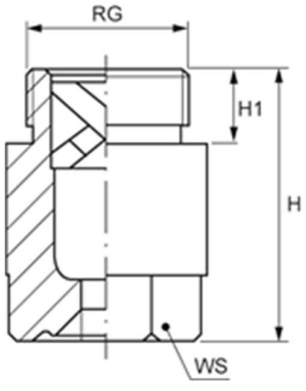

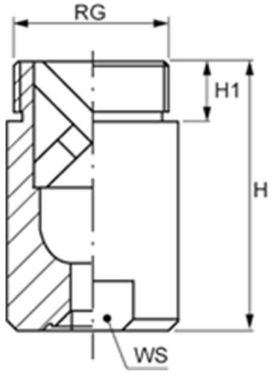

Spray angle 45°

	DAM	DBM	DCM	DDM	Code	D	D1	Flow rate (lpm) at different pressure values (bar)						
						mm	mm	0,7	1,0	2,0	3,0	5,0	7,0	10
45°	•				0740 xx	1,0	0,5	0,36	0,43	0,60	0,74	0,96	1,13	1,35
	•	•			1118 xx	1,1	1,0	0,57	0,68	0,96	1,18	1,52	1,80	2,15
	•	•			1147 xx	1,2	1,1	0,71	0,85	1,20	1,47	1,90	2,25	2,68
	•	•			1188 xx	1,3	1,2	0,91	1,09	1,54	1,88	2,43	2,87	3,43
	•	•			1212 xx	1,4	1,2	1,02	1,22	1,73	2,12	2,74	3,24	3,87
	•	•	•		1235 xx	1,5	1,3	1,14	1,36	1,92	2,35	3,03	3,59	4,29
	•	•	•		1294 xx	1,7	1,5	1,42	1,70	2,40	2,94	3,80	4,49	5,37
	•	•	•		1370 xx	2,0	1,8	1,79	2,14	3,02	3,70	4,78	5,65	6,76
	•	•	•	•	1470 xx	2,1	2,0	2,27	2,71	3,84	4,70	6,07	7,18	8,58
	•	•	•	•	1588 xx	2,3	2,0	2,84	3,39	4,80	5,88	7,59	8,98	10,7
		•	•	•	1659 xx	2,5	2,2	3,18	3,80	5,38	6,59	8,51	10,1	12,0
			•	•	1740 xx	2,7	2,3	3,57	4,27	6,04	7,40	9,55	11,3	13,5
			•	•	1835 xx	2,8	2,6	4,03	4,82	6,82	8,35	10,8	12,8	15,2
			•	•	1940 xx	3,0	3,0	4,54	5,43	7,68	9,40	12,1	14,4	17,2
			•	•	2105 xx	3,2	3,2	5,07	6,06	8,57	10,5	13,6	16,0	19,2
			•	•	2117 xx	3,4	3,3	5,65	6,75	9,55	11,7	15,1	17,9	21,4
			•	•	2147 xx	3,8	3,7	7,10	8,49	12,0	14,7	19,0	22,5	26,8
				•	2188 xx	4,3	4,3	9,08	10,9	15,4	18,8	24,3	28,7	34,3
				•	2235 xx	5,0	4,5	11,4	13,6	19,2	23,5	30,3	35,9	42,9

Spray angle 60°

	DAQ	DBQ	DCQ	DDQ	Code	D	D1	Flow rate (lpm) at different pressure values (bar)						
						mm	mm	0,7	1,0	2,0	3,0	5,0	7,0	10
60°	•				0740 xx	1,0	0,5	0,36	0,43	0,60	0,74	0,96	1,13	1,35
	•	•			1118 xx	1,2	0,8	0,57	0,68	0,96	1,18	1,52	1,80	2,15
	•	•			1147 xx	1,3	1,0	0,71	0,85	1,20	1,47	1,90	2,25	2,68
	•	•	•		1188 xx	1,4	1,1	0,91	1,09	1,54	1,88	2,43	2,87	3,43
	•	•	•		1212 xx	1,5	1,2	1,02	1,22	1,73	2,12	2,74	3,24	3,87
	•	•	•		1235 xx	1,6	1,2	1,14	1,36	1,92	2,35	3,03	3,59	4,29
	•	•	•		1294 xx	1,8	1,3	1,42	1,70	2,40	2,94	3,80	4,49	5,37
	•	•	•		1370 xx	2,0	1,4	1,79	2,14	3,02	3,70	4,78	5,65	6,76
	•	•	•		1470 xx	2,4	1,9	2,27	2,71	3,84	4,70	6,07	7,18	8,58
		•	•		1588 xx	2,6	2,0	2,84	3,39	4,80	5,88	7,59	8,98	10,7
		•	•		1659 xx	2,7	2,0	3,18	3,80	5,38	6,59	8,51	10,1	12,0
		•	•	•	1740 xx	2,9	2,0	3,57	4,27	6,04	7,40	9,55	11,3	13,5
		•	•	•	1835 xx	3,2	2,8	4,03	4,82	6,82	8,35	10,8	12,8	15,2
		•	•	•	1940 xx	3,2	2,8	4,54	5,43	7,68	9,40	12,1	14,4	17,2
		•	•	•	2105 xx	3,4	3,0	5,07	6,06	8,57	10,5	13,6	16,0	19,2
		•	•	•	2117 xx	3,6	3,0	5,65	6,75	9,55	11,7	15,1	17,9	21,4
			•	•	2147 xx	4,0	3,3	7,10	8,49	12,0	14,7	19,0	22,5	26,8
			•	•	2188 xx	4,5	3,7	9,08	10,9	15,4	18,8	24,3	28,7	34,3
				•	2235 xx	5,2	4,5	11,4	13,6	19,2	23,5	30,3	35,9	42,9
				•	2294 xx	5,8	4,7	14,2	17,0	24,0	29,4	38,0	44,9	53,7

Spray angle 90°

	DAU	DBU	DCU	DDU	Code	D	D1	Flow rate (lpm) at different pressure values (bar)						
						mm	mm	0,7	1,0	2,0	3,0	5,0	7,0	10
90°	•				0740 xx	1,0	0,5	0,36	0,43	0,60	0,74	0,96	1,13	1,35
	•				1118 xx	1,2	0,8	0,57	0,68	0,96	1,18	1,52	1,80	2,15
	•	•			1147 xx	1,3	1,0	0,71	0,85	1,20	1,47	1,90	2,25	2,68
	•	•			1188 xx	1,4	1,2	0,91	1,09	1,54	1,88	2,43	2,87	3,43
	•	•			1212 xx	1,5	1,2	1,02	1,22	1,73	2,12	2,74	3,24	3,87
	•	•	•		1235 xx	1,6	1,3	1,14	1,36	1,92	2,35	3,03	3,59	4,29
	•	•	•		1294 xx	1,8	1,3	1,42	1,70	2,40	2,94	3,80	4,49	5,37
	•	•	•		1370 xx	2,0	1,4	1,79	2,14	3,02	3,70	4,78	5,65	6,76
		•	•		1470 xx	2,3	1,8	2,27	2,71	3,84	4,70	6,07	7,18	8,58
		•	•		1588 xx	2,6	1,8	2,84	3,39	4,80	5,88	7,59	8,98	10,7
		•	•		1659 xx	2,7	2,0	3,18	3,80	5,38	6,59	8,51	10,1	12,0
		•	•		1740 xx	2,9	2,0	3,57	4,27	6,04	7,40	9,55	11,3	13,5
		•	•		1835 xx	3,3	2,0	4,03	4,82	6,82	8,35	10,8	12,8	15,2
		•	•		1940 xx	3,3	2,4	4,54	5,43	7,68	9,40	12,1	14,4	17,2
		•	•		2105 xx	3,5	2,6	5,07	6,06	8,57	10,5	13,6	16,0	19,2
			•		2117 xx	3,7	2,7	5,65	6,75	9,55	11,7	15,1	17,9	21,4
			•		2147 xx	4,0	3,2	7,10	8,49	12,0	14,7	19,0	22,5	26,8
			•		2164 xx	4,1	3,2	7,92	9,47	13,4	16,4	21,2	25,1	29,9
				•	2188 xx	4,7	3,2	9,08	10,9	15,4	18,8	24,3	28,7	34,3
				•	2235 xx	5,2	3,8	11,4	13,6	19,2	23,5	30,3	35,9	42,9
				•	2294 xx	5,8	3,8	14,2	17,0	24,0	29,4	38,0	44,9	53,7
				•	2370 xx	6,4	3,8	17,9	21,4	30,2	37,0	47,8	56,5	67,6

Spray angle 120°

	DAW	DBW	DCW	DDW	Code	D	D1	Flow rate (lpm) at different pressure values (bar)						
						mm	mm	0,7	1,0	2,0	3,0	5,0	7,0	10
120°	•				0740 xx	1,0	0,5	0,36	0,43	0,60	0,74	0,96	1,13	1,35
	•	•			1118 xx	1,2	0,8	0,57	0,68	0,96	1,18	1,52	1,80	2,15
	•	•			1147 xx	1,3	0,9	0,71	0,85	1,20	1,47	1,90	2,25	2,68
	•	•			1188 xx	1,5	1,0	0,91	1,09	1,54	1,88	2,43	2,87	3,43
	•	•			1212 xx	1,6	1,1	1,02	1,22	1,73	2,12	2,74	3,24	3,87
	•	•			1235 xx	1,6	1,2	1,14	1,36	1,92	2,35	3,03	3,59	4,29
	•	•			1294 xx	1,9	1,3	1,42	1,70	2,40	2,94	3,80	4,49	5,37
	•	•			1370 xx	2,1	1,4	1,79	2,14	3,02	3,70	4,78	5,65	6,76
		•	•		1470 xx	2,4	1,6	2,27	2,71	3,84	4,70	6,07	7,18	8,58
		•	•		1588 xx	2,7	1,8	2,84	3,39	4,80	5,88	7,59	8,98	10,7
		•	•		1659 xx	3,0	1,8	3,18	3,80	5,38	6,59	8,51	10,1	12,0
		•	•		1740 xx	3,1	1,9	3,57	4,27	6,04	7,40	9,55	11,3	13,5
		•	•		1835 xx	3,3	1,9	4,03	4,82	6,82	8,35	10,8	12,8	15,2
		•	•		1940 xx	3,5	1,9	4,54	5,43	7,68	9,40	12,1	14,4	17,2
		•	•		2105 xx	3,7	2,3	5,07	6,06	8,57	10,5	13,6	16,0	19,2
			•	•	2117 xx	3,8	2,4	5,65	6,75	9,55	11,7	15,1	17,9	21,4
			•	•	2147 xx	4,2	2,7	7,10	8,49	12,0	14,7	19,0	22,5	26,8
			•	•	2164 xx	4,4	2,7	7,92	9,47	13,4	16,4	21,2	25,1	29,9
			•	•	2188 xx	4,6	3,1	9,08	10,9	15,4	18,8	24,3	28,7	34,3
			•	•	2235 xx	5,3	3,3	11,4	13,6	19,2	23,5	30,3	35,9	42,9
			•	•	2294 xx	5,9	4,1	14,2	17,0	24,0	29,4	38,0	44,9	53,7
				•	2370 xx	6,6	4,7	17,9	21,4	30,2	37,0	47,8	56,5	67,6

Spray angle 60°

	Code	RG	D	D1	Flow rate (lpm) at different pressure values (bar)							H	H1	WS
		inch	mm	mm	0,7	1,0	2,0	3,0	5,0	7,0	10	mm	mm	mm
60°	DEQ 2235 xx	3/4"	4,8	3,5	11,4	13,6	19,2	23,5	30,3	35,9	42,9	43	16	27
	DEQ 2295 xx		5,5	4,5	14,2	17,0	24,1	29,5	38,1	45,1	53,9			
	DEQ 2370 xx		6,0	4,5	17,9	21,4	30,2	37,0	47,8	56,5	67,6			
	DEQ 2470 xx		7,0	4,5	22,7	27,1	38,4	47,0	60,7	71,8	85,8			
	DFQ 2470 xx	1"	7,0	5,6	22,7	27,1	38,4	47,0	60,7	71,8	85,8	58	18	36
	DFQ 2590 xx		7,8	5,6	28,5	34,1	48,2	59,0	76,2	90,1	108			
	DFQ 2740 xx		9,5	5,6	35,7	42,7	60,4	74,0	95,5	113	135			
	DGQ 2740 xx	1-1/4"	9,5	5,6	35,7	42,7	60,4	74,0	95,5	113	135	74	19	41
	DGQ 3118 xx		12,5	6,0	57,0	68,1	96,3	118	152	180	215			
	DGQ 3147 xx		16,7	6,0	71,0	84,9	120	147	190	225	268			
	DHQ 3147 xx	1-1/2"	13,0	9,0	71,0	84,9	120	147	190	225	268	85	19	50
	DKQ 3188 xx	2"	15,0	9,0	90,8	109	154	188	243	287	343	106	24	60
	DKQ 3235 xx		16,0	11,0	114	136	192	235	303	359	429			
	DKQ 3294 xx		17,0	11,1	142	170	240	294	380	449	537			
	DLQ 3370 xx	2-1/2"	17,5	11,1	179	214	302	370	478	565	676	128	27	75
	DLQ 3470 xx		23,0	11,1	227	271	384	470	607	718	858			
	DMQ 3588 xx	3"	28,0	14,3	284	339	480	588	759	898	1074	153	30	85
	DNQ 3740 xx	3-1/2"	29,0	17,5	357	427	604	740	955	1130	1351	190	32	105
	DNQ 3940 xx		36,0	17,5	454	543	768	940	1214	1436	1716			
	DPQ 4117 xx	4"	39,0	19,0	568	678	959	1175	1517	1795	2145	205	36	110

Spray angle 90°

	Code	RG	D	D1	Flow rate (lpm) at different pressure values (bar)							H	H1	WS
		inch	mm	mm	0,7	1,0	2,0	3,0	5,0	7,0	10	mm	mm	mm
90°	DEU 2295 xx	3/4"	5,8	3,0	14,2	17,0	24,1	29,5	38,1	45,1	53,9	43	16	27
	DEU 2370 xx		6,4	4,5	17,9	21,4	30,2	37,0	47,8	56,5	67,6			
	DEU 2470 xx		8,0	4,5	22,7	27,1	38,4	47,0	60,7	71,8	85,8			
	DEU 2590 xx		9,7	4,5	28,5	34,1	48,2	59,0	76,2	90,1	108			
	DFU 2590 xx	1"	8,6	4,5	28,5	34,1	48,2	59,0	76,2	90,1	108	58	18	36
	DFU 2740 xx		9,3	5,0	35,7	42,7	60,4	74,0	95,5	113	135			
	DFU 2830 xx		9,9	6,0	40,3	48,2	68,2	83,5	108	128	152			
	DGU 3118 xx	1-1/4"	13,0	6,0	57,0	68,1	96,3	118	152	180	215	74	19	41
	DGU 3147 xx		16,0	6,0	71,0	84,9	120	147	190	225	268			
	DHU 3147 xx	1-1/2"	16,0	6,0	71,0	84,9	120	147	190	225	268	85	19	50
	DHU 3188 xx		14,5	9,0	90,8	109	154	188	243	287	343			
	DKU 3235 xx	2"	16,6	11,0	114	136	192	235	303	359	429	106	24	60
	DKU 3294 xx		18,0	11,0	142	170	240	294	380	449	537			
	DKU 3370 xx		25,0	11,0	179	214	302	370	478	565	676			
	DLU 3470 xx	2-1/2"	27,0	11,1	227	271	384	470	607	718	858	128	27	75
	DLU 3588 xx		30,0	14,3	284	339	480	588	759	898	1074			
	DMU 3740 xx	3"	30,0	17,5	357	427	604	740	955	1130	1351	153	30	85
	DMU 3870 xx		32,5	17,5	420	502	710	870	1123	1329	1588			
	DNU 3940 xx	3-1/2"	35,5	17,5	454	543	768	940	1214	1436	1716	190	32	105
	DNU 4117 xx		39,0	19,0	568	678	959	1175	1517	1795	2145			
	DPU 4147 xx	4"	42,8	25,4	710	849	1200	1470	1898	2245	2684	205	36	110

Spray angle 120°

	Code	RG	D	D1	Flow rate (lpm) at different pressure values (bar)							H	H1	WS
		inch	mm	mm	0,7	1,0	2,0	3,0	5,0	7,0	10	mm	mm	mm
120°	DEW 2295 xx	3/4"	5,1	3,0	14,2	17,0	24,1	29,5	38,1	45,1	53,9	43	16	27
	DEW 2370 xx		6,5	3,5	17,9	21,4	30,2	37,0	47,8	56,5	67,6			
	DEW 2470 xx		8,5	4,5	22,7	27,1	38,4	47,0	60,7	71,8	85,8			
	DEW 2590 xx		9,2	4,5	28,5	34,1	48,2	59,0	76,2	90,1	108			
	DFW 2590 xx	1"	11,5	4,5	28,5	34,1	48,2	59,0	76,2	90,1	108	58	18	36
	DFW 2740 xx		12,0	4,5	35,7	42,7	60,4	74,0	95,5	113	135			
	DFW 2830 xx		13,0	5,6	40,3	48,2	68,2	83,5	108	128	152			
	DGW 3118 xx	1-1/4"	13,5	6,0	57,0	68,1	96,3	118	152	180	215	74	19	41
	DGW 3147 xx		17,0	6,0	71,0	84,9	120	147	190	225	268			
	DHW 3118 xx	1-1/2"	13,0	6,0	57,0	68,1	96	118	152	180	215	85	19	50
	DHW 3188 xx		20,0	9,0	90,8	109	154	188	243	287	343			
	DKW 3235 xx	2"	18,0	11,0	114	136	192	235	303	359	429	106	24	60
	DKW 3294 xx		19,0	11,0	142	170	240	294	380	449	537			
	DKW 3370 xx		21,3	11,0	179	214	302	370	478	565	676			
	DLW 3470 xx	2-1/2"	23,5	11,1	227	271	384	470	607	718	858	128	27	75
	DLW 3588 xx		26,5	14,3	284	339	480	588	759	898	1074			
	DMW 3740 xx	3"	29,5	17,5	357	427	604	740	955	1130	1351	153	30	85
	DMW 3870 xx		32,0	17,5	420	502	710	870	1123	1329	1588			
	DNW 3940 xx	3-1/2"	33,5	17,5	454	543	768	940	1214	1436	1716	190	32	105
	DNW 4117 xx		37,0	19,0	568	678	959	1175	1517	1795	2145			
	DPW 4147 xx	4"	42,0	25,4	710	849	1200	1470	1898	2245	2684	205	36	110

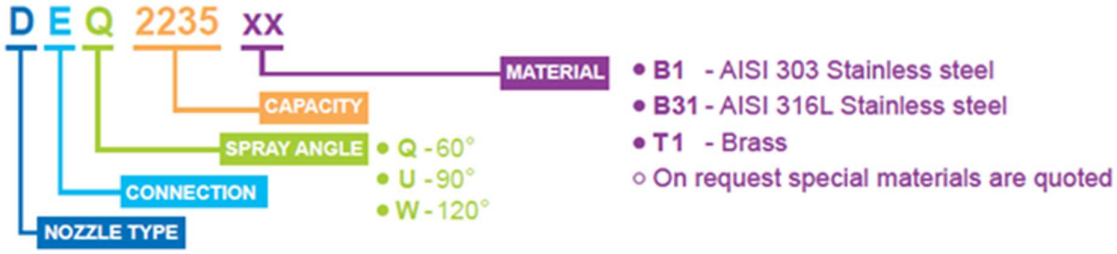

FLAT FAN NOZZLE SERIES SX-750 - K

SX-750 K flat fan nozzle works on the deflection principle conveying a water vein onto a machined deflection surface, and produces a jet with a wide angle flat spray pattern, medium impact value and medium size droplets. Between their inlet orifice and spray orientation there is a 75° angle. Their round outlet orifice and free inside passage minimize the risk of clogging. In addition, compared to standard flat fan nozzles working with a limited operating pressure, the K series models with large spray angles produce an excellent mist effect. These K nozzles are available with threaded connections, for capacities from 0390 and 3350, and also as tips to be assembled onto a nipple by means of a retaining nut. An alternative option are the SX-750 K types.

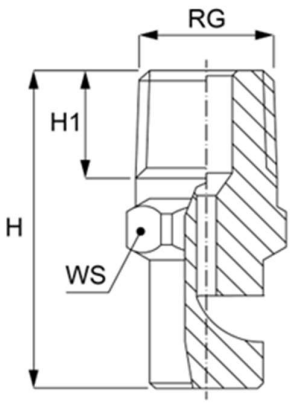

TECHNICAL DATA	
Inlet	Threated
Coupling:	male BSPT, male NPT
MATERIALS	
Body	Stainless Steel AISI 316L , brass

KGW	KHW	KIW	KJW	KKW	KLW	KXW	Code	D	Flow rate (lpm) at different pressure values (bar)							Spray angle (degrees) at pressure (bar)	
								mm	0,5	1,0	2,0	3,0	4,0	5,0	7,0	1,5	4,0
•						•	0390	0,60	0,16	0,23	0,32	0,39	0,45	0,50	0,60	90	120
•						•	0590	0,70	0,24	0,34	0,48	0,59	0,68	0,76	0,90	105	120
•						•	0780	0,80	0,32	0,45	0,64	0,78	0,90	1,01	1,19	110	125
•						•	1120	1,00	0,49	0,69	0,98	1,20	1,39	1,55	1,83	105	122
•	•					•	1160	1,10	0,65	0,92	1,31	1,60	1,85	2,07	2,44	110	130
•	•					•	1200	1,30	0,82	1,15	1,63	2,00	2,31	2,58	3,06	120	130
•	•					•	1230	1,40	0,94	1,33	1,88	2,30	2,66	2,97	3,51	110	125
•	•					•	1310	1,60	1,27	1,79	2,53	3,10	3,58	4,00	4,74	120	130
•	•					•	1390	1,80	1,59	2,25	3,18	3,90	4,50	5,03	5,96	130	140
•	•					•	1590	2,30	2,41	3,41	4,82	5,90	6,81	7,62	9,01	120	130
•	•					•	1780	2,60	3,18	4,50	6,37	7,80	9,01	10,1	11,9	130	140
•	•					•	1940	2,90	3,84	5,43	7,68	9,40	10,9	12,1	14,4	140	150
•	•					•	2117	3,30	4,78	6,75	9,55	11,7	13,5	15,1	17,9	110	120
•	•					•	2141	3,60	5,76	8,14	11,5	14,1	16,3	18,2	21,5	120	130
•	•					•	2157	3,80	6,41	9,06	12,8	15,7	18,1	20,3	24,0	120	130
	•					•	2172	4,00	7,02	9,93	14,0	17,2	19,9	22,2	26,3	125	135
	•					•	2188	4,10	7,68	10,9	15,4	18,8	21,7	24,3	28,7	130	140
	•					•	2210	4,40	8,57	12,1	17,1	21,0	24,2	27,1	32,1	135	145
		•				•	2230	4,50	9,39	13,3	18,8	23,0	26,6	29,7	35,1	110	120
		•				•	2270	5,00	11,0	15,6	22,0	27,0	31,2	34,9	41,2	115	125
		•	•			•	2310	5,30	12,7	17,9	25,3	31,0	35,8	40,0	47,4	125	135
		•	•				2350	5,60	14,3	20,2	28,6	35,0	40,4	45,2	53,5	130	140
			•				2390	6,00	15,9	22,5	31,8	39,0	45,0	50,3	59,6	130	140
			•				2470	6,50	19,2	27,1	38,4	47,0	54,3	60,7	71,8	135	140
			•				2550	7,10	22,5	31,8	44,9	55,0	63,5	71,0	84,0	135	145
			•				2630	7,50	25,7	36,4	51,4	63,0	72,7	81,3	96,2	140	150
				•			2700	8,00	28,6	40,4	57,2	70,0	80,8	90,4	107	130	140
				•			2780	8,40	31,8	45,0	63,7	78,0	90,1	101	119	135	145
				•			2860	8,70	35,1	49,7	70,2	86,0	99,3	111	131	135	145
				•			2940	9,30	38,4	54,3	76,8	94,0	109	121	144	140	150
				•			3110	10,30	44,9	63,5	89,8	110	127	142	168	125	135
				•			3125	11,00	51,0	72,2	102	125	144	161	191	130	135
				•			3141	11,40	57,6	81,4	115	141	163	182	215	130	135
				•			3164	12,20	67,0	94,7	134	164	189	212	251	135	145
					•		3235	14,60	95,9	136	192	235	271	303	359	130	135
					•		3350	17,90	143	202	286	350,0	404	452	535	130	135

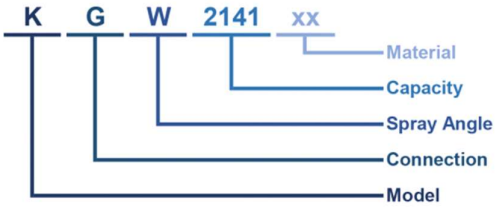

B1 = AISI 303			B31 = AISI 316L			T1 = Brass
See table						
W = 120°						
G = 1/8"	H = 1/4"	I = 3/8"	J = 1/2"	K = 3/4"	L = 1"	X = Ø14.7
K Series - Large Spray Angle						

ROTATING NOZZLE FOR TUNNELS SERIE SX-752

The turbine nozzle SX-752 is therefore recognized as "Product of European Interest".
HORIZON 2020 European Commission

The SX-752 patented device is based on a new technology able forming from of large liquid jets small drops (80 at 400 micron) with a working pressure of less than 10 bar.

The new technique exploit the relative speed difference between drops and air by rotating pulverizing nozzles.
The principle of operation is very simple: the multi-orifice nozzle is mounted on the shaft of a hydraulic turbine which is operated by part of the supply fluid.
The water jet that hits the turbine involves the transformation of the tangential thrust of the water into torsional force applied to the turbine shaft, resulting high-speed rotation of the turbine and nozzle.

Using this technique it is possible to obtain atomized drops of small size and with good coverage on the ground by means of only water supply at a pressure of 5 bar.

This result until now has been impossible to achieve with the flow rates required by a conventional firefighting system.

TECHNICAL DATA	
Connection	½'' BSP F thread
Operating pressure	5 bar
Fluid flow rate	150 Lt / min at 5 bar
Type of jet	Cone
MATERIALS	
Body	Aluminium and stainless steel INOX AISI 316L (B31)

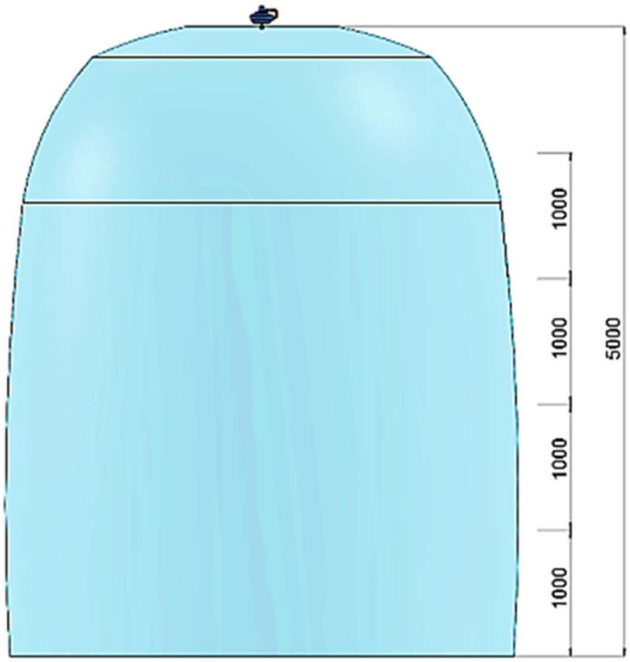

The multi-orifice head has an output spray angle of 180° that converges rapidly into a full cone jet, with a degree of atomization of water particles dependent on the feed pressure:

At low pressures (from 1 to 2 bar) a rather coarse drop diameter is dispensed, which allows a wetting radius with values up to 6.0 meters.

At higher pressures (around 5 bar) atomization is advantaged with a considerable reduction in drop diameter and formation on the ground of a very fine "rain effect".

Product of European Interest

The SX-752 nozzle was submitted to the European Commission (HORIZON 2020 European Commission) which in October 2019 analysed the proposal considering it suitable for the second phase of the Project, as shown below:

"Your EU proposal 837040 – PNR: evaluation results and start of grant preparation a Coordinator,
Congratulations. Your proposal has reached the stage of Grant Agreement preparation. To view the evaluation results and the instructions on how to provide additional information and data required for the preparation of your Grant Agreement, log on to the Participant Portal > My Area > My Project(s) (http://europa.eu/!yG74HN) and click the Manage Project (MP) button. You will receive a separate notification when additional information for the Grant Agreement is required.
Regards,
Participant Portal Grant Management Service. This message has been automatically generated by the Grant Management Service of the European Commission."

SICUREX® EUROPE B.V.
Weena 290,
3012NJ Rotterdam,
The Netherlands
Tel. +31 (0)10 307 09 67

vincenzo.sartori@sicurex.net

SICUREX® ITALIA
MILANO - Viale Abruzzi 94
Tel +39 347 423 4724
Tel +39 02 30 312 7395

leonardo.lovati@sicurex.net

SICUREX® FRANCE
26-28 Rue de Londres - Paris
Tel. +33 (0) 10 307 0967

geraldine.chiron@sicurex.net